Community Development
39550 Liberty Street, P.O. Box 5006, Fremont, CA 94537-5006
www.fremont.gov, ph: 510-494-4700

Landscape Development Requirements & Policies
(LDRP)

FREMONT MUNICIPAL CODE SECTIONS:

FMC 4-5000
FMC 8-1511
FMC 8-22000
FMC 8-22700
FIRE CODE

And

NPDES PERMIT SECTION C.3
STATE WATER EFFICIENT LANDSCAPE ORDINANCE (WELO)
BAY FRIENDLY LANDSCAPE REQUIREMENTS (BFL)
CITY LANDSCAPE STANDARD DETAILS

Updated: February, 2012.

Check on-line for the latest version at:
www.fremont.gov/LandscapePolicies

THIS PAGE

INTENTIONALLY

LEFT BLANK

Table of Contents

		Page No.
I.	**Purpose of LDRP and Definitions**	2
II.	**Items Required with Landscape Plan Submittal**	4
	A. Entitlement	
	B. Building Permit Plan Review	
	C. Construction and Project Completion	
III.	**Landscape Plan Checklist – Building Permit & Improvement Plans**	5
	A. General Project and Submittal Information	
	B. Site Layout Requirements	
	C. Planting Requirements	
	D. Tree Preservation Requirements	
	E. Irrigation Requirements	
	F. Stormwater Requirements (Landscape-based)	
IV.	**Required Forms:**	
	Form A: Bay-Friendly Basic Practices Checklist for Private Development	17
	The following forms are collectively referred to as the "Water Efficient Worksheet":	
	Form B: Hydrozone Table (Water Efficient Worksheet, part 1 of 3)	19
	Form C: Maximum Applied Water Allowance – MAWA (Water Efficient Worksheet, part 2 of 3)	20
	Form D: Estimated Total Water Use – ETWU (Water Efficient Worksheet, part 3 of 3)	21
	The following forms are for post construction:	
	Form E: Certificate of Completion	22
	Form F: Certificate of Installation	23
V.	**Sample Plans:**	
	A. Hydrozone Plan	24
	B. Tree Survey	25
VI.	**Requesting Landscape Inspection after Construction**	26
VII.	**Arborist Analysis and Report Standard**	27
XIII.	**Tree Removal Application for Non-Development Projects**	29
IX.	**Resources Publications and Documents.**	31
X.	**Landscape Standard Details (for City Projects and Right-of-Way)**	33

Purpose of LDRP and Definitions

PURPOSE:

Who uses this document:
The Landscape Development Requirements and Policies (LDRP) is intended for the landscape architect preparing construction documents in the form of Building Permit or Improvement Plans, or in preparing preliminary design documents in the form of a Site Plan and Architectural Review for review by the City of Fremont. Some items will require coordination with other disciplines such as civil engineer, planner, arborist or others.

What the document does:
The LDRP assembles most of the City of Fremont Council adopted landscape requirements, Regional and State landscape requirements, and Bay-Friendly Landscape requirements (BFL) into one easy to use checklist to assist the applicant/landscape architect when submitting for Building Permit or Improvement Plan approval. The checklist is not required at the time of planning entitlement review (Site Plan and Architectural Review), but it can assist the design team to develop a plan that will ultimately be subject to these requirements during detailed (construction documents) review. Stand alone single-family residential home projects (with less than 5,000 square feet of landscape area) are not required to complete the checklist unless conditioned through a separate approval, such as a Planned District zoning condition.

Why should this document be followed:
The primary reason to use this document is to accelerate the Building Permit and Improvement Plan review process so that applicants can move their project through City approval in the most efficient manner possible. Landscape projects that address all the applicable requirements accurately in their first submittal, along with the completed checklist, should be able to gain approval in 2 or 3 reviews (not withstanding other city permit requirements).

In addition to efficient plan reviews, this document can assist the design team to organize and coordinate the multiple landscape requirements and forms set out in the Fremont Municipal Code, State of California Water Efficient Ordinance (WELO), Municipal Regional National Pollution Discharge Elimination System Permit Provision C.3 (C.3), City Tree Preservation Ordinance, Bay-Friendly Landscape Guidelines (BFL), and other outside agency policies.

DEFINITIONS:

Bay-Friendly Landscape (BFL):
Bay-Friendly Landscape, a program of Stopwaste.org, is a holistic approach to the design and maintenance of landscape to support the integrity of the San Francisco Bay watershed through best practices such as designs that include, but are not limited to, strong harmony with the native and natural conditions, reduced waste, reduced runoff, integrated pest management, improved healthy soils with less fertilizers, and water conservation measures. To qualify as a Bay-Friendly Landscape, the design must meet a minimum 9 Required Practices plus 60 points on a 215 point scorecard. Fremont encourages all landscape to achieve this goal, but at a minimum, projects must meet 7 of the 9 Minimum Required Practices. Council adopted the “7 of 9” requirement in Resolution 2009-40.

WELO:
WELO is the acronym for **Water Efficient Landscape Ordinance**. On January 1, 2010 the State of California WELO became effective on all non-single family home projects with landscape larger than 2,500 square feet in size. Stand alone single family home projects with landscape areas larger than 5,000 square feet are subject to the WELO. The City of Fremont is required to enforce the State Ordinance through the Building Permit plan review process. WELO establishes many landscape and irrigation water conservation techniques, which are included here in this Document. To review the full State Ordinance, visit: http://www.water.ca.gov/wateruseefficiency/landscapeordinance/

WELO applies to the following project types that require building permit or improvement plan review and approval:

- Except as described below, any project with landscaped areas greater than 2,500 including developer installed single family and multi-family projects.
- Any homeowner provided or homeowner-hired single family and multi-family residential projects with a landscape area equal to or greater than 5,000 square feet.

Tree Survey Requirements:
The City regulates the removal and destruction of existing trees to preserve the visual beauty that trees provide to the residents and visitors; environmental benefit they provide, such as reducing heat buildup and controlling wind and erosion; and their contribution to property values. Trees have value as individual trees, as groups of trees, and as components of the overall urban forest. To the extent that trees are contributing in these ways to the public welfare of the people of the City of Fremont, trees are protected and preserved through the regulation of their removal and damage to them. The complete Tree Preservation Ordinance is available on line at: www.fremont.gov/landscapepolicies

Fremont Municipal Code (FMC):
The City Council enacts Ordinances that influence and regulate development in Fremont. The citations to the FMC in the checklist are referring to the Zoning code, Tree Preservation code, or Subdivision code. The full Fremont Municipal Code is available for view at: http://www.codepublishing.com/ca/fremont/.

Municipal Regional National Pollution Discharge Elimination System Permit Provision C.3 (C.3):
The new Municipal Regional National Pollutant Discharge Elimination System Permit (also known as the MRP), issued by the San Francisco Regional Water Quality Control Board, regulates stormwater pollution. The MRP requires 70+ municipalities in the Bay Area, including the City of Fremont, to place conditions on development projects to incorporate site design measures, source controls, treatment measures, and for larger projects, flow duration controls. Permit provision C.3, titled New Development and Redevelopment gives local responsibility to include low impact development (LID) techniques on projects. The LDRP Checklist is limited to landscape-based LID solutions and coordination of those solutions with other City requirements. The complete City stormwater requirements can be found at: http://fremont.gov/stormwaterdevelopement.

Items Required with Landscape Plan Submittal

DELIVERABLES by SUBMITTAL STAGE		FORMAT	REFERENCE
A. Entitlement (Site Plan and Architectural Review):			
1	Landscape Plan (Conceptual Planting and Site Plan)	Plan set	WELO / FMC / BFL
2	Water Efficient Landscape Worksheet	Plan set / 8½ x 11	WELO, See Form B, C, & D
3	Hydrozone Plan with Hydrozone Table (conceptual based on Landscape Plan)	8½ x 11	WELO, See Form B
4	Bay Friendly Checklist for Private Development (based on Conceptual Landscape Plan)	8½ x 11	BFL / See Form A
5	Preliminary Landscape-based Stormwater Treatment Plan	Plan set	C.3
6	Tree Survey/Tree Preservation Plan and Tree Species Table	Plan set	FMC
B. Building Permit or Improvement Plan Review (Construction Documents):			
1	Landscape Plan Checklist (see page 5 of this document)	8½ x 11	City of Fremont required
2	Water Efficient Landscape Worksheet (revised from Entitlement Stage)	8½ x 11	WELO, See Form B, C, & D
3	Bay Friendly Checklist for Private Development (Resubmit)	8½ x 11	BFL / See Form A
4	Soil Management Report (not required if complying w/item 2, option 2, of the BFL Checklist)	8½ x 11	WELO
5	Tree Survey/Tree Preservation Plan and Tree Species Table (may be combined with Demolition Plan or Grading Plan as appropriate)	Plan set	FMC
6	Grading Plan (may be prepared by civil engineer).	Plan set	WELO Section 492.8
7	Planting Plan	Plan set	FMC / WELO Section 492.6
8	Hydrozone Plan with Hydrozone Table (revised from Entitlement Stage)	Plan set	WELO, See Form B
9	Irrigation Plan (Complete)	Plan set	FMC / WELO Section 492.7
C. Project Completion (Prior to Construction Sign-off and Occupancy):			
1	Certificate of Completion by Property Owner	8½ x 11	WELO
2	Certification of Installation by Landscape Architect - According to the Landscape Documentation Package (WELO)	8½ x 11	WELO
3	Irrigation Schedule	8½ x 11	WELO
4	Schedule of Landscape and Irrigation Maintenance	8½ x 11	WELO
5	Landscape Irrigation Audit Report	8½ x 11	WELO

Checklist Legend:

LSD: City Landscape Standard Detail
C.3: NPDES Regional Permit
WELO: State Water Efficient Landscape Ordinance
BFL: Qualifies for Bay-Friendly Landscape
FMC: Fremont Municipal Code

Landscape Plan Checklist

(Submit with Building Permit and/or Improvement Plan Construction Documents)

Project Name:_____

"PLN" Number (Bldg. Permit) or Tract Number (Improvement Plan): _____

Landscape Architect & Firm: _____

CA License Number: _____ **Phone Number:** _____

Submit the following checklist with First Plan Submittal. Check boxes as they apply.

Complete	Incomplete	Not Applicable		
			A.	**GENERAL PROJECT AND SUBMITTAL INFORMATION REQUIRED:**
☐	☐	☐	1.	Plans are prepared on accurately surveyed site plan(s) to appropriate scale. **Reference:** FMC 8-22704
☐	☐	☐	2.	Plans include north arrow, graphic and written scale, property lines, street names, and accurate right of way. **Reference:** FMC 8-22704
☐	☐	☐	3.	Plans show existing and proposed features. **Requirement:** • Plans show existing and proposed buildings, trees, structures, walls, fences, utilities, meters, paved areas, and other site improvements. • Plans show location of all existing and proposed landscape and street trees including a complete keyed plant list showing quantities, container sizes, and correct botanical designations of all landscape materials. • Plans include design details for landscape architectural features such as walls, fences, lighting, paving types, arbors, benches, fountains and other features; and complete irrigation plans. **Reference:** FMC 8-22704

Checklist Legend:

LSD:	City Landscape Standard Detail	**WELO:**	State Water Efficient Landscape Ordinance	**FMC:**	Fremont Municipal Code
C.3:	NPDES Regional Permit	**BFL:**	Qualifies for Bay-Friendly Landscape		

☐ ☐ ☐ 4. Plans and Calculations are prepared by a Landscape Architect.

Requirement: Plans are stamped electronically or otherwise with a valid State of California Landscape Architect's license/stamp including registration number and expiration. Signature required on final set at time of permit issuance.
Reference: FMC 8-22706

☐ ☐ ☐ 7. The Bay-Friendly Checklist for Private Development has been filled out and included with this submittal.

Requirement: Non-Single Family Home projects are designed to meet a minimum seven of the nine Bay-Friendly Landscape (BFL) Practices, unless conditioned through a separate Planning approval to meet more BFL requirements. Submit with plans, the completed form titled: *Bay-Friendly Basic Practices Checklist for Private Development*.
Reference: City Council Resolution 2009-40
Form A: *See required form on page 17.*

CHECKLIST CONTINUES ON NEXT SHEET

Checklist Legend:

LSD:	City Landscape Standard Detail	**WELO:**	State Water Efficient Landscape Ordinance	**FMC:**	Fremont Municipal Code
C.3:	NPDES Regional Permit	**BFL:**	Qualifies for Bay-Friendly Landscape		

Complete	Incomplete	Not Applicable		
			B.	**SITE LAYOUT REQUIREMENTS:**
☐	☐	☐	1.	Parking lot trees – interior.

Requirement: The plans show one large canopy tree for every 10 parking stalls. Trees shall be evenly distributed throughout the internal field of the parking lot. Large canopy trees can be substituted with medium sized canopy trees if spaced every 6 parking stalls to meet the intent of shading the parking lot.
Note: See LSD-6 and Planting Requirements for definition of "large" and "medium" trees.
Reference: FMC 8-22009

☐	☐	☐	2.	Parking lot trees – perimeter.

Requirement: The plans show one (1) screen or canopy tree for every three (3) parking stalls between the parking lot and property line, when those stalls are adjacent to the property perimeter.
Reference: FMC 8-22009

☐	☐	☐	5.	Parking lot – screening from street.

Requirement: Parking areas within 50 feet of a public street are screened with one of the following **(CHECK ONE OR MORE)**:

- ☐ three (3) foot tall masonry wall,
- ☐ three (3) foot tall berm, or
- ☐ a continuous shrub planting of 5 gallon plants that will grow to a minimum three (3) feet tall.

Note: Midtown and other urban districts and settings may be governed by different requirements.
Reference: FMC 8-22009

☐	☐	☐	7.	Driveways and parking areas include decorative paving.

Requirement: Driveways and parking areas in excess of 20 feet wide shall incorporate decorative concrete or pavers over at least ten percent of the area to provide relief and accent to the large area of paving.
Reference: FMC 8-22706

☐	☐	☐	6.	Outdoor space design is cohesive and linked with other open space.

Requirement: Site layout provides a harmonic balance between open space and buildings. Useable open space areas are linked with open space corridors of reasonable width in proper scale to adjacent built features. (Isolated open space areas are discouraged.)
Reference: FMC 8-22706

Checklist Legend:

LSD:	City Landscape Standard Detail	**WELO:**	State Water Efficient Landscape Ordinance	**FMC:**	Fremont Municipal Code
C.3:	NPDES Regional Permit	**BFL:**	Qualifies for Bay-Friendly Landscape		

☐ ☐ ☐ 3. Tree planters – minimum size.

Requirement: Tree planters shall be maximum size feasible to benefit tree growth and provide separation from infrastructure and adjacent paving, curbs, walls, etc. Minimum planter size for trees shall have an interior dimension of six feet in any direction and have no less than 48 square feet of soil surface area overall, which is free of any inorganic material such as utilities, fire hydrants, light poles, signs, subterranean vaults, etc. (hint: an inside planter dimension of 6'x8' is 48 square feet and will fit between two parking stalls.)
Note: Urban tree grate installations are exempt and are governed by LSD-2.
Reference: FMC 8-22009

☐ ☐ ☐ 4. Play area design complies with the Consumer Product Safety Commission guidelines and American Society for Testing And Materials (ASTM).

Requirement:

- Plans identify safety protection zone(s),
- Plans identify manufacture and model numbers
- Plans include a note requiring contractor to submit a letter prepared by a Certified Playground Inspector certifying that the installed play area is in compliance with the California Code of Regulations §65730 (Title 22, Division 4, Chapter 22) Safety Regulations for Playgrounds and ASTM 1487. The letter shall confirm the manner in which the assembly and installation of playground equipment complies with the Chapter requirements.

☐ ☐ ☐ 8. Pedestrian links between buildings and street provided.

Requirement: In Community Commercial, Neighborhood Commercial, and Central Business District Zones, visually distinct pedestrian walkways shall be provided that link buildings to other buildings, and buildings to street sidewalks.
Reference: FMC 8-22706

☐ ☐ ☐ 9. Wetband firebreak provided adjacent to fire areas.

Requirement: For projects in hillside fire areas adjacent to open space or undeveloped land a wetband is required as follows:

- A labeled and dimensioned 30-foot wide spray irrigated or paved protection zone between structure and open space along rear of property.
- Minimum planting is low growing fire-resistant groundcover or grass.
- High canopy trees may not be closer than 10 feet to any other mature canopy or structure.
- Hardscape surfaces and pools may be in Wetband.
- Large understory shrubs and auxiliary structures are not allowed.

Reference: FMC Fire Code

Checklist Legend:

LSD:	City Landscape Standard Detail	**WELO:**	State Water Efficient Landscape Ordinance	**FMC:**	Fremont Municipal Code
C.3:	NPDES Regional Permit	**BFL:**	Qualifies for Bay-Friendly Landscape		

Complete	Incomplete	Not Applicable		
			C.	**PLANTING REQUIREMENTS:**
☐	☐	☐	1.	Street trees required.

Requirement: Street trees are shown at 24 inch box size and planted within the right of way in front of the each parcel. Street tree placement complies with spacing requirements and distance from utilities as identified in City Standard Detail, LSD-5. Compliance with planting requirements identified in City Standard Details, LSD -1 and LSD-2 is required.
Reference: FMC 8-22706, LSD

☐ ☐ ☐ 2. Plans show at least one tree for every 500 square feet of landscape area.

Requirement: Plan must have a minimum of one tree per 500 square feet of landscape area. Street trees are additional to this requirement. Show a table on the Planting Plan that documents the following:

- Total square feet of landscape areas (excluding buildings, roadways, and parking/circulation areas),
- Total trees planted (or existing preserved) per 500 square feet of landscape area.

Reference: FMC 8-22706

☐ ☐ ☐ 3. Bark mulch required to three inch depth.

Requirement: Include a note on plans that three inches of shredded (walk-on) bark mulch is required for all non-sod planting areas.
Note: Painted or dyed bark, and "gorilla hair" are prohibited. Bark is not a substitute for landscape planting. (See the BFL checklist for credit on one of the minimum requirements.)
Reference: BFL, LSD

☐ ☐ ☐ 4. Trees meet minimum spacing from buildings and utilities.

Requirement: Plans show trees with the following minimum clearances to buildings or other built features:

- Small trees (to 15 feet tall) no closer than 6 feet from building or 2 feet from paving, curbs, or walls with a minimum planting area 5 feet wide.
- Medium trees (to 30 feet tall) no closer than 10 feet from building or 3 feet from paving, curbs, or walls with a minimum planting area 6 feet wide.
- Large trees (above 30 feet tall) no closer than 15 feet from building or 3 feet from paving, curbs, or walls with a minimum planting area 6 feet wide, preferably 8 feet wide. [LSD-6]
- Refer to City Standard Detail LSD-5 for required spacing from utilities.

Reference: LSD

Checklist Legend:

LSD:	City Landscape Standard Detail	**WELO:**	State Water Efficient Landscape Ordinance	**FMC:**	Fremont Municipal Code
C.3:	NPDES Regional Permit	**BFL:**	Qualifies for Bay-Friendly Landscape		

☐ ☐ ☐ 5. Plants meet minimum size requirements.

Requirement: All plants meet the following minimum size standards:

- Trees are 15 gallon or larger, except street trees, which are minimum 24 inch box.
- Shrubs and groundcover plants are minimum 1 gallon size. Forty percent of all shrubs and groundcover must be 5 gallon size or larger.

Reference: FMC 8-21606

☐ ☐ ☐ 6. City standards for work in right of way or public property.

Requirement: All landscape work shown in City right of way or City owned property/easements comply with City of Fremont Landscape Standard Details.
Reference: LSD

☐ ☐ ☐ 7. Restrictions on the use of turf.

- **Requirement:** Turf is limited to no more than 25 percent of the total planted area on the project.
  Note: Use of turf is strongly discouraged to promote water conservation. (See BFL checklist for applicability.)
  Reference: BFL

- **Requirement:** Turf is not used on slopes greater than 4:1
  Reference: WELO

☐ ☐ ☐ 8. Select water conserving plants and turf species.

Requirement: Plant List (table/legend) shown on plans shall include the Water Use Classification of Landscape Species (WUCOLS) designation for the selected species, the spacing for shrub and groundcover species, and the quantity of each plant used.
Note: Use of medium and high water plants is strongly discouraged to promoted water conservation. (See BFL checklist for applicability of a 75% Native/low water requirement on plant selections.)
Reference: WELO

Checklist Legend:

LSD:	City Landscape Standard Detail	**WELO:**	State Water Efficient Landscape Ordinance	**FMC:**	Fremont Municipal Code
C.3:	NPDES Regional Permit	**BFL:**	Qualifies for Bay-Friendly Landscape		

Complete | Incomplete | Not Applicable

D. TREE PRESERVATION REQUIREMENTS [FMC 4-5111]

☐ ☐ ☐ 1. Tree survey meets minimum plan standards.

Requirement: Plans include a Tree Survey showing the following:

- Existing and proposed site features, including but not limited to buildings, walls, paving, grading, etc.
- Tree(s) with six inch DBH (trunk diameter at 4.5 feet above ground level) and larger are located on plan by a licensed surveyor. Tree trunks must be represented with an accurately scaled dot to show the true bulk of the DBH. Tree canopies must be accurately delineated.
- Trees are labeled by number on the plan and tagged on-site per ISA standards.
- Tree Survey Plan includes a summary table identifying botanical designation, DBH, and elevation of each tree at ground level.

Note: Tree Survey information may be incorporated into a topographic survey or other project plan, provide all the required information is provided. If no trees exist on site, provide a statement by the civil engineer, landscape architect or surveyor indicating this, in lieu of the required tree survey.

Reference: FMC 4-5111

Sample Plan: *See the sample Tree Survey on page 25.*

☐ ☐ ☐ 2. Tree survey is incorporated into other plans.

Project plans clearly show which trees are proposed for preservation and which trees are proposed for removal. Trees for removal and preservation are shown on ALL the following project (construction) plans:

- Show trees for removal and preservation on the following plans:
  - Grading Plan
  - Demolition Plan
- Show trees for preservation (only) on the following plans:
  - Planting Plan
  - Irrigation Plan
  - Underground Utility Plans and Joint Trench Plan

☐ ☐ ☐ 3. Tree protection fencing shown on plans.

Requirement: Trees designated for preservation comply with City of Fremont Standard Detail: "Tree Protection Fencing," LSD-9, or other tree specific City approved tree protection measures prepared by a International Society of Arboriculture (ISA) Certified Arborist or American Society of Consulting Arborist (ASCA) member in good standing.

Reference: LSD

Checklist Legend:

LSD:	City Landscape Standard Detail	**WELO:**	State Water Efficient Landscape Ordinance	**FMC:**	Fremont Municipal Code
C.3:	NPDES Regional Permit	**BFL:**	Qualifies for Bay-Friendly Landscape		

Complete	Incomplete	Not Applicable		
			E.	**IRRIGATION REQUIREMENTS:**
☐	☐	☐	1.	Meters and valves.

Requirement: Plans show location and size of all meters, points of connection, pumps, isolation valves and remote control valves. Irrigation must be on a dedicated meter.
Reference: WELO

☐ ☐ ☐ 2. Operating pressure and GPM.

Requirement: Maximum GPM (Gallons Per Minute) demand and minimum operating pressure for each point of connection is clearly shown on plan along with the GPM demand for each valve.
Reference: WELO, BFL

☐ ☐ ☐ 3 Pipes and sleeves.

Requirement: Plans show size and location of all pipes including sleeves for the irrigation system The following minimum requirements are shown on the plans:

- All lateral lines shall have 12" cover.
- All main lines shall have 18" cover.
- All main lines and wiring under pavement shall be sleeved with 24" cover.
- All lateral lines under pavement shall be sleeved with 18" cover.

☐ ☐ ☐ 4. Hose bibs and quick couplers.

Requirement: Plans show location and type of all hose bibs and quick couplers.
Reference: WELO

☐ ☐ ☐ 5 Weather-based controller.

Requirement: Plans show location and type of weather-based controller, which relies on soil moisture sensor, rain gauge or other weather-based controlling device, wire size, and watering schedule.
Reference: WELO, BFL

☐ ☐ ☐ 6. Backflow prevention device.

Requirement: A Reduced Pressure Backflow Prevention Device (with enclosure) of the same size as the meter shall be installed at every irrigation meter on the project. The model and installation of the Backflow Prevention Unit is subject to approval from the Alameda County Water District. A weather blanket shall be installed on all backflow prevention devices.
Requirement: WELO

Checklist Legend:

LSD:	City Landscape Standard Detail	**WELO:**	State Water Efficient Landscape Ordinance	**FMC:**	Fremont Municipal Code
C.3:	NPDES Regional Permit	**BFL:**	Qualifies for Bay-Friendly Landscape		

☐ ☐ ☐ 7. Design details included.

Requirement: Irrigation installation details shall be shown on plans to demonstrate compliance with these irrigation requirements.

☐ ☐ ☐ 8. Irrigate trees separately.

Requirement: All trees are irrigated by individual bubblers on an irrigation circuit isolated from the main system by a remote control valve.
Reference: WELO

☐ ☐ ☐ 9. Limits on use of spray irrigation.

Requirement: Areas less than 8 feet wide shall not use spray irrigation.

Note: Sustainable drip irrigation or bubbler irrigation systems are encouraged and should be designed with rigid subsurface lateral system for durability. Subsurface (tube) irrigation and above ground polyethylene piping is not permitted as a long term solutions to irirgation.
Reference: WELO

☐ ☐ ☐ 10. No irrigation run-off allowed.

Requirement: Irrigation system (including spray irrigation) is designed for zero run-off onto paved surfaces unless that surface drains to another landscape area (e.g. walkway with landscape on two sides). Spray irrigation must be placed two (2) feet away from impervious surfaces unless that surface drains to another landscape area.
Reference: WELO

☐ ☐ ☐ 11. WELO forms, report, and Hydrozone Plan required.

Requirement: Compliance with The State of California, Water Efficient Landscape Ordinance (WELO) is required for all projects with landscape areas 2,500 square feet or larger. The following plans, forms, and reports are required with the development application. **Note:** Provide forms in separate 8.5" by 11" format (or other appropriate format) with plans, and do not place forms (except Hydrozone Table) or reports on plans.

- Soil Management Report in compliance with section 492.5 of WELO,
- Hydrozone Plan and Information Table,
  ***Sample Plan**: See sample Hydrozone Plan on page 24*
- Water Efficient Landscape Worksheet [provide to Alameda County Water District (ACWD)],
  ***Form B, C, & D:** See required forms beginning on page 19*
- Maximimum Applied Water Allowance (MAWA), (provide to ACWD)
  ***Form C:** See required form on page 20*
- Estimated Total Water Use (ETWU), (provide to ACWD)
  ***Form D:** See required form on page 21*

Reference: WELO

Checklist Legend:

LSD:	City Landscape Standard Detail	**WELO:**	State Water Efficient Landscape Ordinance	**FMC:**	Fremont Municipal Code
C.3:	NPDES Regional Permit	**BFL:**	Qualifies for Bay-Friendly Landscape		

☐ ☐ ☐ 12. Separated irrigation system required for City property, easements, and Homeowner Association managed common areas.

Requirement: Back-up landscape or any landscape that will be maintained or owned by the City has a separate meter, backflow prevention device and controller compliant with City Standard Details.
Reference: WELO, LSD

☐ ☐ ☐ 13. Post construction signoff by Project Landscape Architect and Owner.

Requirement: The following documents and certifications are required before final occupancy from the Building Official during construction to comply with WELO. Provide forms in separate 8.5" by 11" format (or other appropriate format) with plans. Do not place forms on plans.
Note: The Project Landscape Architect should anticipate inspection during construction to support separate written certifications from him or her, that the installed and completed project substantially complies with the City of Fremont Approved Plans, complies with the Bay Friendly requirements identified for this project, and complies with the WELO requirements as documented in the plans.

- Certificate of Completion signed by property owner,
  Form E: See required form page 20.
- Certificate of Installation signed by the Project Landscape Architect, AND the Project (Licensed) Landscape Contractor.
  Form F: See required form on page 21.
-

Reference: WELO

Checklist Legend:

LSD:	City Landscape Standard Detail	**WELO:**	State Water Efficient Landscape Ordinance	**FMC:**	Fremont Municipal Code
C.3:	NPDES Regional Permit	**BFL:**	Qualifies for Bay-Friendly Landscape		

Complete	Incomplete	Not Applicable		
			F.	**STORMWATER (LANDSCAPE-BASED) REQUIREMENTS:**
☐	☐	☐	1.	Design of landscape-based stormwater treatment complies with City Standards.

Requirement: The design of stormwater treatment in the right of way comply with City Landscape Standard Details and the Municipal Regional National Pollution Discharge Elimination System Permit Provision C.3 requirements. The City details show options that include a tree well filter and a stromwater planter for use in the right of way. Trash Capture Devices are required upstream of planter with treatment soil in the right of way.

Note: The handbook is available on the Alameda Countywide Clean Water Program website at: http://www.cleanwaterprogram.org/businesses_developers.htm, and City of Fremont Stormwater requirements at http://fremont.gov/stormwaterdevelopement.
Reference: LSD, C.3

☐	☐	☐	2	Plans show specifications for treatment soil.

Requirement: Plans show soil specifications in compliance with the Alameda Countywide Clean Water Program C.3 Technical Guide when treatment soil is used on projects.
Reference: C.3, BFL

☐	☐	☐	3.	Plans delineate treatment areas.

Requirement: Plans clearly delineate where landscape based stormwater design features are located throughout the site. Place curb or header around landscape-based stormwater features for easy identification when combined with or adjacent to non-stormwater landscape.
Reference: C.3

~ End of Landscape Plan Checklist ~

Checklist Legend:

LSD:	City Landscape Standard Detail	**WELO:**	State Water Efficient Landscape Ordinance	**FMC:**	Fremont Municipal Code
C.3:	NPDES Regional Permit	**BFL:**	Qualifies for Bay-Friendly Landscape		

THIS PAGE

INTENTIONALLY

LEFT BLANK

LDRP Form A: Bay-Friendly Minimum Required Practices Checklist for Private Development

Project Name:_____

"PLN" Number (Bldg. Permit) or Tract Number (Improvement Plan): _____

Landscape Architect & Firm: _____

CA License Number: _____ **Phone Number:** _____

This Bay-Friendly Basic Practices Checklist is required with the submission of all development applications to the City of Fremont, excluding single family home parcels, but including subdivision common areas. Each project is required to meet any seven (7) of the following nine (9) Practices. In addition to this requirement, each project is encouraged to meet all 9 of the Practices, plus 60 points on the Bay-Friendly Civic and Commercial Landscape Scorecard, which is available at www.BayFriendly.org and at www.fremont.gov.

Identify which of the following Bay-Friendly Landscape (BFL) Practices this project is designed to meet and submit this form with your development application. Refer to the scorecard or the Bay-Friendly Landscape Guidelines for detail descriptions of requirements.

Yes	No	Measure & Requirement
☐	☐	1. Mulch all shrub areas with 3 inch layer of mulch. **Requirement:** All soil on site is protected with a minimum of 3 inches of mulch after construction. **Reference:** Bay-Friendly Scorecard item C.6.a.
☐	☐	2. Amend soil with compost before planting. **Requirement:** Compost is specified as the soil amendment, at the rates indicated by a soil analysis to bring the soil organic matter content to a minimum of 3.5% by dry weight or 1 inch of compost. Option 1: Require import topsoil to meet organic matter content of a minimum 3.5% by dry weight. Option 2: submit soils report that identifies existing topsoil meets organic matter content of 3.5% by dry weight or greater. **Reference:** Bay-Friendly Scorecard item C.7.a.i.
☐	☐	3. Reduce and Recycle Landscape Construction Waste. **Requirement:** Divert 50% of landscape construction and demolition waste by volume or weight. **Reference:** Bay-Friendly Scorecard item D.2.a.
☐	☐	4. Choose and Locate Plants that Grow to Natural Size and Avoid Shearing. **Requirement:** No plant species will require shearing. Select species and spacing to allow plants to grow to natural size and shape without shearing at any point in the lifespan of the plant, excluding structural and regular maintenance pruning. Plant spacing shall not allow plants to grow into adjacent buildings, sidewalks, roadways, or adjacent landscape areas. **Reference:** Bay-Friendly Scorecard item E.1.a.

(checklist continued on next page)

Yes	No	Measure & Requirement
☐	☐	5. Do not Plant Invasive Plant Species.

Requirement:
None of the plant species listed by CAS-IPC as invasive in the San Francisco, Bay Area are included in the planting design.
Reference:
Bay-Friendly Scorecard item E.2.a.

☐ ☐ 6. Grow Drought Tolerant California Native, Mediterranean or Climate Adapted Plants.

Requirement:
A minimum of 75% of the total number of plants in the non-turf areas must be species that require no or little summer watering once established. Species should be adapted to the climate in which they will be planted, as referenced by a third party source. Plants shall be rated for moderate or occasional water use for this region and climate.
Reference:
Bay-Friendly Scorecard item E.3.a.i.

☐ ☐ 7. Minimize Turf.

Requirement:
A maximum of 25% of total irrigated area is specified as turf, with sports or multi-use fields exempted.
Reference:
Bay-Friendly Scorecard item E.4.c.i.

☐ ☐ 8. Specify Automatic Weather-Based Irrigation Controller with Soil Moisture and/or Rain Sensor.

Requirement:
A Weather-based irrigation controllers, soil moisture based controllers, or other self-adjusting irrigation controllers, shall be required for entire irrigation system.
Reference:
Bay-Friendly Scorecard item F.2.a.

☐ ☐ 9. Sprinkler and Spray Heads are Not Specified in Areas less than 8 Feet Wide.

Requirement:
Sprinkler and spray heads are not specified in areas less than or equal to 8 feet wide to prevent overspray and runoff. Acceptable alternatives include bubbler or drip with subsurface rigid lateral pipes. Bubblers shall not exceed 1.5 gallons per minute per bubbler.
Reference:
Bay-Friendly Scorecard item F.2.b.

Construction Signoff

Re-submit this form to request final occupancy post-construction, with the following signed verification:

After inspecting construction of the landscape I hereby verify that the seven required items identified prior to permit issuance and as documented in the approved plans permitted by the City of Fremont, have been installed as agreed on this project.

Project Landscape Architect:

_____ _____
Signature Date

Name/Company (print):_____CA License Number:_____

LDRP Form B: Hydrozone Information Table

~Water Efficient Landscape Worksheet (part 1 of 3)~

Include a table on Hydrozone Plan. See sample Hydrozone Plan on page 24. Complete the hydrozone table(s) for each hydrozone. Use as many tables as necessary to provide the square footage of landscape area per hydrozone.

Hydrozone*	Zone or Valve	Irrigation Method**	Area (Sq. Ft.)	% of Landscape Area
	Total			**100%**

**** Hydrozone***
HW = High Water Use Plants
MW = Moderate Water Use Plants
LW = Low Water Use Plants

*****Irrigation Method***
MS = Micro-spray
S = Spray
R = Rotor
B= Bubbler
D= Drip
O = Other

LDRP Form C: Maximum Applied Water Allowance (MAWA)

~Water Efficient Landscape Worksheet (part 2 of 3)~

This form is a required element of the Landscape Documentation Package and shall be submitted with Building Permit and Improvement Plan sets to the City of Fremont.

The project's Maximum Applied Water Allowance shall be calculated using this equation:

MAWA = (ETo) (0.62) [(0.7 x LA) + (0.3 x SLA)]

where:

MAWA = Maximum Applied Water Allowance (gallons per year)
ETo = Reference Evapotranspiration (inches per year – Fremont = 47.0)
0.7 = ET Adjustment Factor (ETAF)
LA = Landscaped Area includes Special Landscape Area (square feet)
0.62 = Conversion factor (to gallons per square foot)
SLA = Portion of the landscape area identified as Special Landscape Area (square feet)
0.3 = the additional ET Adjustment Factor for Special Landscape Area (1.0 - 0.7 = 0.3)

Maximum Applied Water Allowance = **_____gallons per year**

Show calculations.

<u>Effective Precipitation (Eppt)</u>

If considering Effective Precipitation, use 25% of annual precipitation. Use the following equation to calculate Maximum Applied Water Allowance:

MAWA= (ETo – Eppt) (0.62) [(0.7 x LA) + (0.3 x SLA)]

Maximum Applied Water Allowance = **_____gallons per year**

Show calculations.

LDRP Form D: Estimated Total Water Use (ETWU)

~Water Efficient Landscape Worksheet (part 3 of 3)~

This form is a required element of the Landscape Documentation Package and shall be submitted with Building Permit and Improvement Plan sets to the City of Fremont.

The project's Estimated Total Water Use is calculated using the following formula:

$$ETWU = (ETo)(0.62)\left(\frac{PF\,x\,HA}{IE} + SLA\right)$$

where:

ETWU = Estimated total water use per year (gallons per year)
ETo = Reference Evapotranspiration (inches per year – Fremont = 47.0)
PF = Plant Factor from WUCOLS (see Definitions)
HA = Hydrozone Area [high, medium, and low water use areas] (square feet)
SLA = Special Landscape Area (square feet)
0.62 = Conversion Factor (to gallons per square foot)
IE = Irrigation Efficiency (minimum 0.71)

Hydrozone Table for Calculating ETWU

Please complete the hydrozone table(s). Use as many tables as necessary.

Hydrozone	Plant Water Use Type(s)	Plant Factor (PF)	Area (HA) (square feet)	PF x HA (square feet)
			Sum	
	SLA			

Estimated Total Water Use = _____gallons

Show calculations.

LDRP Form E: Certificate Of Completion

This certificate is filled out by the project applicant (owner) upon completion of the landscape project.

Project Name:_____

"PLN" Number (Bldg. Permit) or Tract Number (Improvement Plan): _____

Part 1. Project Information Sheet (Submit with Form F)

Date		
Project Name		
Name of Project Applicant	Telephone No.	
	Fax No.	
Title	Email Address	
Company	Street Address	
City	State	Zip Code

Project Address and Location:

Street Address		Parcel, Tract or Building Permit Number
City		Latitude/Longitude (optional)
State	Zip Code	

Property Owner or his/her designee:

Name	Telephone No.	
	Fax No.	
Title	Email Address	
Company	Street Address	
City	State	Zip Code

Property Owner:

"I/we certify that I/we have received copies of all the documents within the Landscape Documentation Package and the Certificate of Completion and that it is our responsibility to see that the project is maintained in accordance with the Landscape and Irrigation Maintenance Schedule."

_____

Property Owner Signature Date

Print Name:_____

Please answer the questions below:

1. Date the Landscape Documentation Package was submitted to the City_____
2. Date the Landscape Documentation Package was approved by the City_____
3. Date that a copy of the Water Efficient Landscape Worksheet (including the Water Budget Calculation) was submitted to the local water purveyor (ACWD) _____

LDRP Form F: Certification of Installation According to The Landscape Documentation Package

Project Name:_____

"PLN" Number (Bldg. Permit) or Tract Number (Improvement Plan): _____

Part 2. Certification of Installation (submit with Form E, which includes Part 1):
"I/we certify that based upon periodic site observations, the work has been substantially completed in accordance with the WELO ordinance and that the landscape, planting, and irrigation installation conform with the criteria and specifications of the City of Fremont approved Landscape Documentation Package."

Signature of Landscape Contractor: X _____	Date:
Landscape Contractor Name and Firm (print):	Telephone No.:
	License No.:
Title:	Email:

Signature of Landscape Architect of Record: X _____	Date:
Landscape Architect Name and Firm (print):	Telephone No.:
	License No.:
Title:	Email:

Attached	Not Attached		
			Required Attachments:
☐	☐	**Part 3.**	**Irrigation Scheduling** **Requirement:** Attach parameters for setting the irrigation schedule on controller as required by the ordinance. **Reference:** WELO, Section 492.10
☐	☐	**Part 4.**	**Schedule Of Landscape And Irrigation Maintenance** **Requirement:** Attach schedule of Landscape and Irrigation Maintenance as required by the ordinance. **Reference:** WELO, Section 492.11
☐	☐	**Part 5.**	**Landscape Irrigation Audit Report** **Requirement:** Attach Landscape Irrigation Audit Report as required by the ordinance. **Reference:** WELO, Section, 492.12
☐	☐	**Part 6.**	**Soil Management Report** **Requirement:** • Attach soil analysis report, if not previously submitted with the Landscape Documentation Package as required by the ordinance. • Attach documentation verifying implementation of recommendations from soil analysis report as required by the ordinance. **Reference:** WELO, Section, 492.5

SAMPLE HYDROZONE PLAN

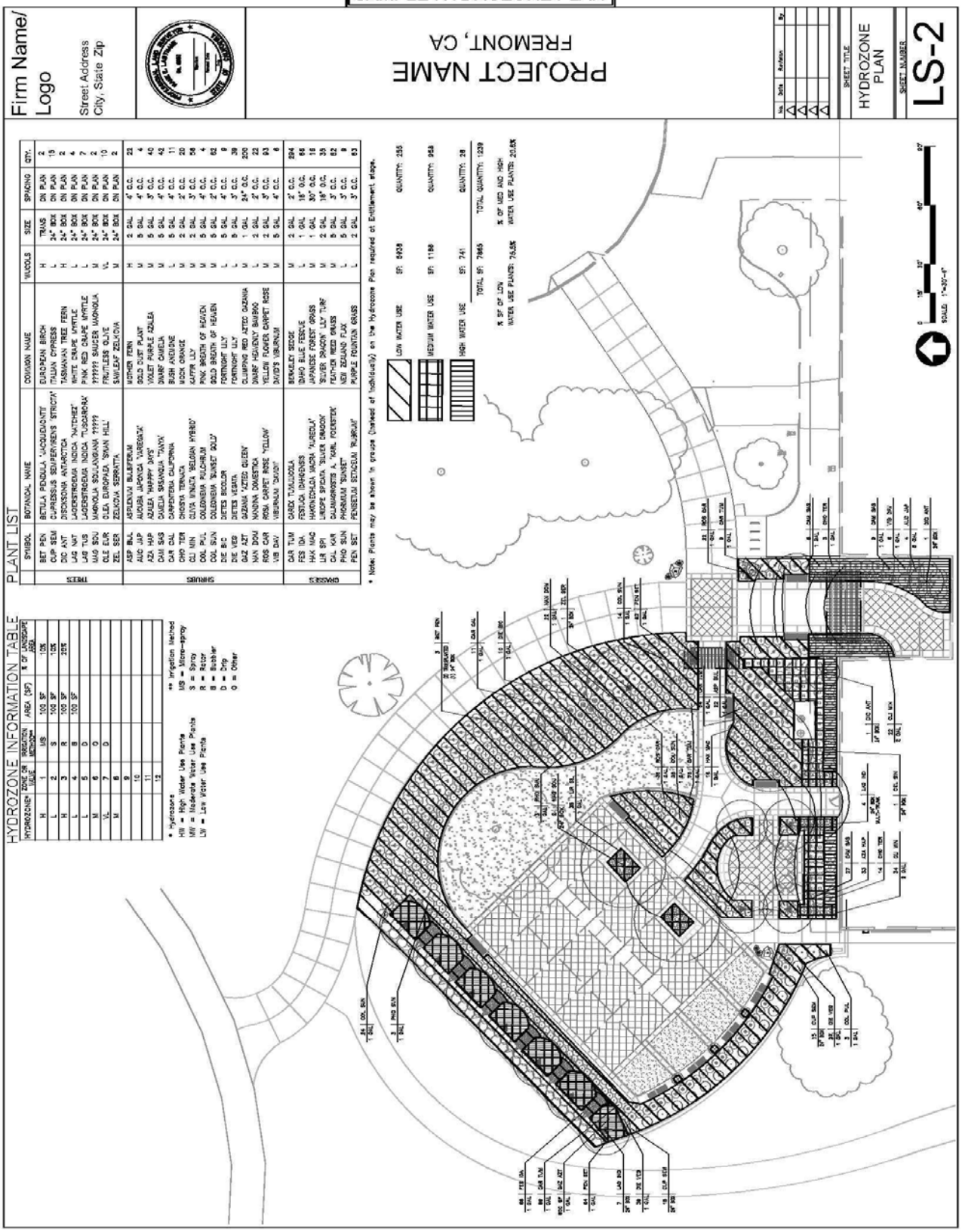

SAMPLE TREE SURVEY / TREE PROTECTION PLAN

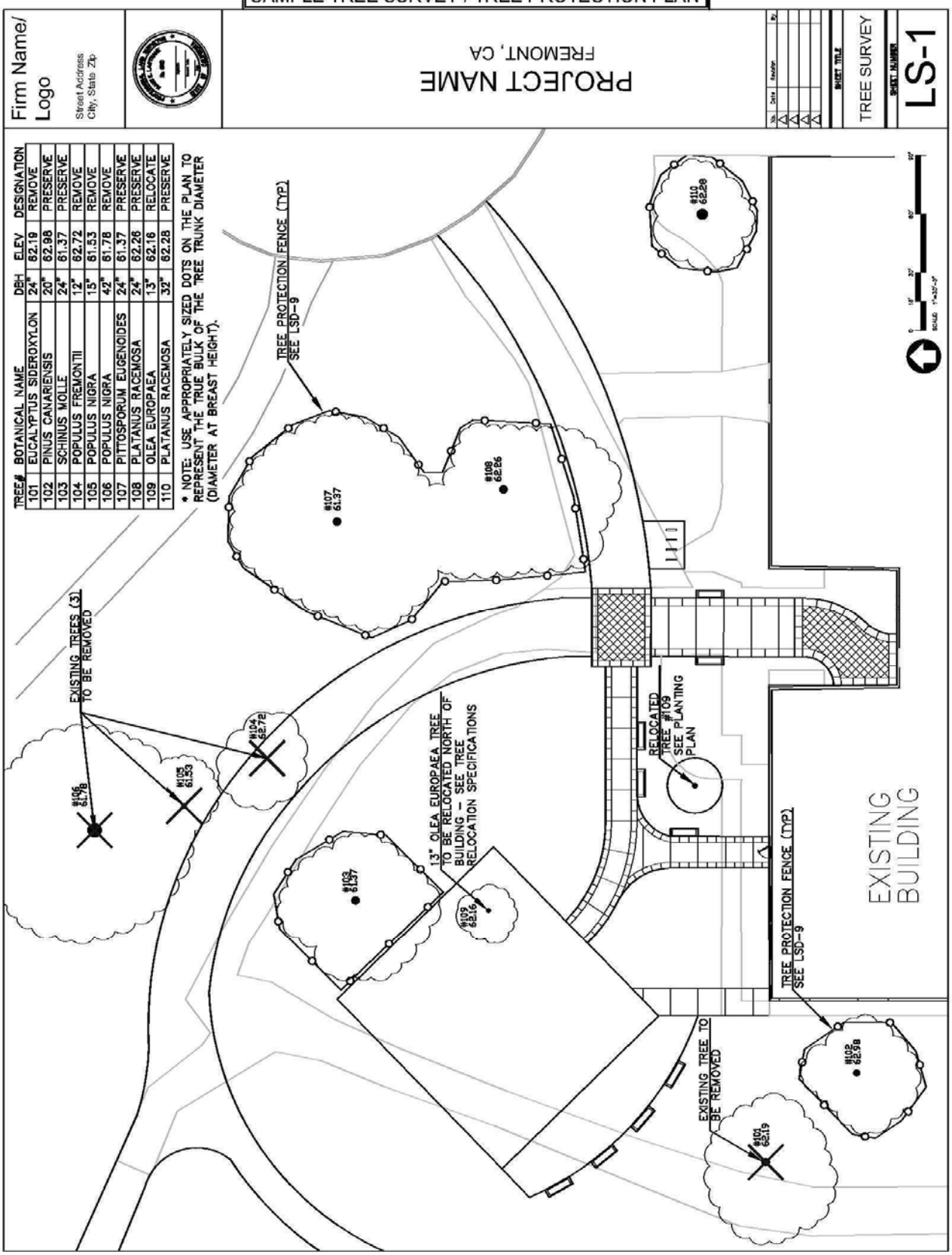

TREE #	BOTANICAL NAME	DBH	ELEV	DESIGNATION
101	EUCALYPTUS SIDEROXYLON	24"	62.19	REMOVE
102	PINUS CANARIENSIS	20"	62.98	PRESERVE
103	SCHINUS MOLLE	24"	61.37	PRESERVE
104	POPULUS FREMONTII	12"	62.72	REMOVE
105	POPULUS NIGRA	15"	61.53	REMOVE
106	POPULUS NIGRA	42"	61.78	REMOVE
107	PITTOSPORUM EUGENOIDES	24"	61.37	PRESERVE
108	PLATANUS RACEMOSA	24"	62.26	PRESERVE
109	OLEA EUROPAEA	13"	62.16	RELOCATE
110	PLATANUS RACEMOSA	32"	62.28	PRESERVE

* NOTE: USE APPROPRIATELY SIZED DOTS ON THE PLAN TO REPRESENT THE TRUE BULK OF THE TREE TRUNK DIAMETER (DIAMETER AT BREAST HEIGHT).

Requesting Landscape Inspection of Development Projects

Construction must be 100% complete before requesting inspection for Building Permit (occupancy) or Tract Acceptance. All post construction forms must be completed and submitted to the City with the inspection request.

Forms required:

- **Form A:** Bay-Friendly Checklist with "Construction Sign-off" portion completed (BFL)
- **Form E:** Certificate of Completion (WELO)
- **Form F:** Certificate of Installation (WELO), with following attachments:
  - Irrigation Schedule
  - Landscape Irrigation Audit Report (conducted by a Certified landscape Irrigation Auditor.)
  - Soil Management Report (unless already provided during plan review)
  - Verification of implementation of recommendations from soil analysis report

For Tract Acceptance:

Engineering Construction Inspection
Community Development Department
39550 Liberty Street
Fremont, CA 93537-5006
Ph: (510) 494-4700
Fax: (510) 494-4646

For Certificate of Occupancy:

Development Services Supervisor
Community Development Department
39550 Liberty Street
Fremont, CA 93537-5005
Ph: (510) 494-4487
Fax: (510) 494-4820

Special note for Temporary Occupancy Requests: Temporary Occupancies are handled on a case-by-case basis. At a minimum, landscape must be substantially complete with only minor items remaining. In cases where Temporary Occupancies are considered by the City, the Certificate of Completion (Form E) and the Certificate of Installation (Form F) may be temporarily substituted for a detailed punch-list prepared by the Project Landscape Architect. The punch list shall document all minor items remaining that must be completed before Final Occupancy. Certificate of Completion (Form E) and the Certificate of Installation (Form F) and follow-up City inspection is still required before Final Occupancy.

Miscellaneous Landscape Inspection Requests:

City Landscape Architect
Community Development Department
39550 Liberty Street
Fremont, CA 94537-5006
Ph: (510) 494-4700
Fax: (510) 494-4721

Arborist Analysis Report Standards

Note: Arborist analysis is only required if requested by the city and is not a standard submittal item on development projects or as part of a Tree Removal Application. The applicant may choose to provide an arborist analysis at his or her discretion, in advance of a potential request by the city.

An arborist analysis report is required to make a more detailed assessment of an individual tree's suitability for preservation or assessment of a proposed design near an existing tree. The report shall be prepared by an Arborist, certified by the ISA (International Society of Arboriculture) and approved by the City of Fremont. The City will require a deposit (estimated amount) from the applicant in order to cover the cost of the arborist report. If the applicant uses their own approved Arborist, the deposit may be required for a peer review of the Arborist report. Any unused amount of the deposit will be returned to the applicant.

The arborist report will include, at a minimum, the following factors in the evaluation of suitability for preservation:

***Tree health**
Healthy, vigorous trees are better able to tolerate impacts such as root injury, demolition of existing structures, changes in soil grade and moisture, and soil compaction, than are non-vigorous trees.

***Structural Integrity**
Trees with significant amounts of wood decay and other structural defects that cannot be corrected are likely to fail. Such trees will not be preserved in areas where damage to people or property is likely to occur.

***Species response**
There is a wide variation in the response of individual species to construction impacts and changes in the environment.

***Tree age and longevity**
Old trees, while having significant emotional and aesthetic appeal, sometimes have limited physiological capacity to adjust to an altered environment. Young trees are better able to generate new tissue and respond to change. Older trees may require modifications to the development proposal, to achieve preservation.

***Other evaluation as identified by the City**
Each project has unique features that may impact trees. The analysis will explore innovative alternatives in design that promote preservation of quality trees. The City may choose to require tree appraisals on complex projects where significant development may occur near trees to be preserved. Tree appraisals will provide a basis of penalties for destruction of trees during construction and may be used to assess mitigation on projects with significant tree removal.

Give each tree a rating for suitability for preservation based upon its age, health, structural condition, and tree's ability to exist safely within the development environment.

THIS PAGE

INTENTIONALLY

LEFT BLANK

Replace This Sheet (and the next blank sheet) With Tree Removal Application/Permit

blank

Resources, Publications and Documents

1. *Bay-Friendly Landscape Guidelines(Book)*, Alameda County Waste Management (aka www.stopwaste.org)

2. *Water Use Classification of Landscape Species (WUCOLS),* University of California cooperative Extension. (www.water.ca.gov/wateruseefficiency/docs/wucols00.pdf)

3. *City of Fremont Stormwater Treatment Requirements* (http://fremont.gov/stormwaterdevelopment)

4. C.3 Stormwater Technical Guide, Alameda Countywide Clean Water Program (http://www.eoainc.com/download/ACCWP_C3_Technical_Guidance_090506-300dpi.pdf)

5. *State Water Resources Control Board.* (http://www.waterboards.ca.gov)

6. *Sunset Western Garden Book*, Lane Publishing.

7. *Wateright Tutorials*, Center for Irrigation Technology, Cal State Fresno (http://www.wateright.org/advisories.asp)

8. *Plants and Landscapes for Summer Dry Climates (Book),* East Bay Municipal Utility District

9. *Trees and Development: A Technical Guide to Preservation of Trees During Land Development (Book),* International Society of Arboriculture (Matheny, Clark)

10. *California Irrigation Management Information Systems,* State of California, Department of Water Resources, (www.cimis.water.ca.gov)

11. *International Society of Arboriculture*. (www.isa-arbor.com)

12. *American Society of Consulting Arborists.* (www.asca-consultants.org)

13. *Trees are Good.* Professional and consumer information on trees from International Society of Arboriculture (www.treesaregood.org)

14. *Calculate the ecological and financial benefit of your tree.* I-Tree is based on USDA Forest Service "Statum" tree assessment tool. (http://www.treebenefits.com/calculator/index.cfm)

THIS PAGE

INTENTIONALLY

LEFT BLANK

LANDSCAPE STANDARD DETAILS (LSD) FOR CITY PROJECTS AND RIGHT-OF-WAY

Table of Contents

DETAIL NO.	TITLE
LSD-1	TREE PLANTING AND STAKING
LSD-2	TREE PLANTING WITH TREE GRATE
LSD-3	SHRUB AND GROUNDCOVER PLANTING
LSD-4	SHRUB AND GROUNDCOVER LAYOUT
LSD-5	STREET TREE CLEARANCES
LSD-6	TREE CLEARANCES
LSD-7	MEDIAN COBBLE PAVING
LSD-8	MAINTENANCE BAND
LSD-9	TREE PROTECTION FENCING
LSD-10	TEMPORARY TRUNK WRAP
LSD-11	*Not used*
LSD-12	TREE AND SHRUB PLANTING ON SLOPE
LSD-13	TREE PLANTING GUIDE (LIST)
LSD-14	IRRIGATION MATERIALS
LSD-15	IRRIGATION CONTROLLER CABINET w/ CALSENSE CONTROLLER
LSD-16	BACKFLOW PREVENTOR UNIT
LSD-17	BACKFLOW PREVENTOR UNIT CAGE
LSD-18	IRRIGATION TRENCH
LSD-19	QUICK COUPLING VALVE IN BOX
LSD-20	IRRIGATION WIRE SPLICE
LSD-21	IRRIGATION ROTOR OR POP-UP
LSD-22	IRRIGATION GATE VALVE
LSD-23	REMOTE CONTROL VALVE W/ GATE VALVE
LSD-24	MASTER VALVE AND FLOW SENSOR
LSD-25	PRESSURE REDUCTION VALVE
LSD-26	IRRIGATION WYE STRAINER
LSD-27	LANDMARK TREE PLAQUE
LSD-28	LANDMARK TREE RAILING
LSD-29	STORMWATER TREEWELL (2 pages)
LSD-30	STORMWATER PLANTER (4 pages)
LSD-31	STORMWATER TRASH CAPTURE INLET (3 pages)

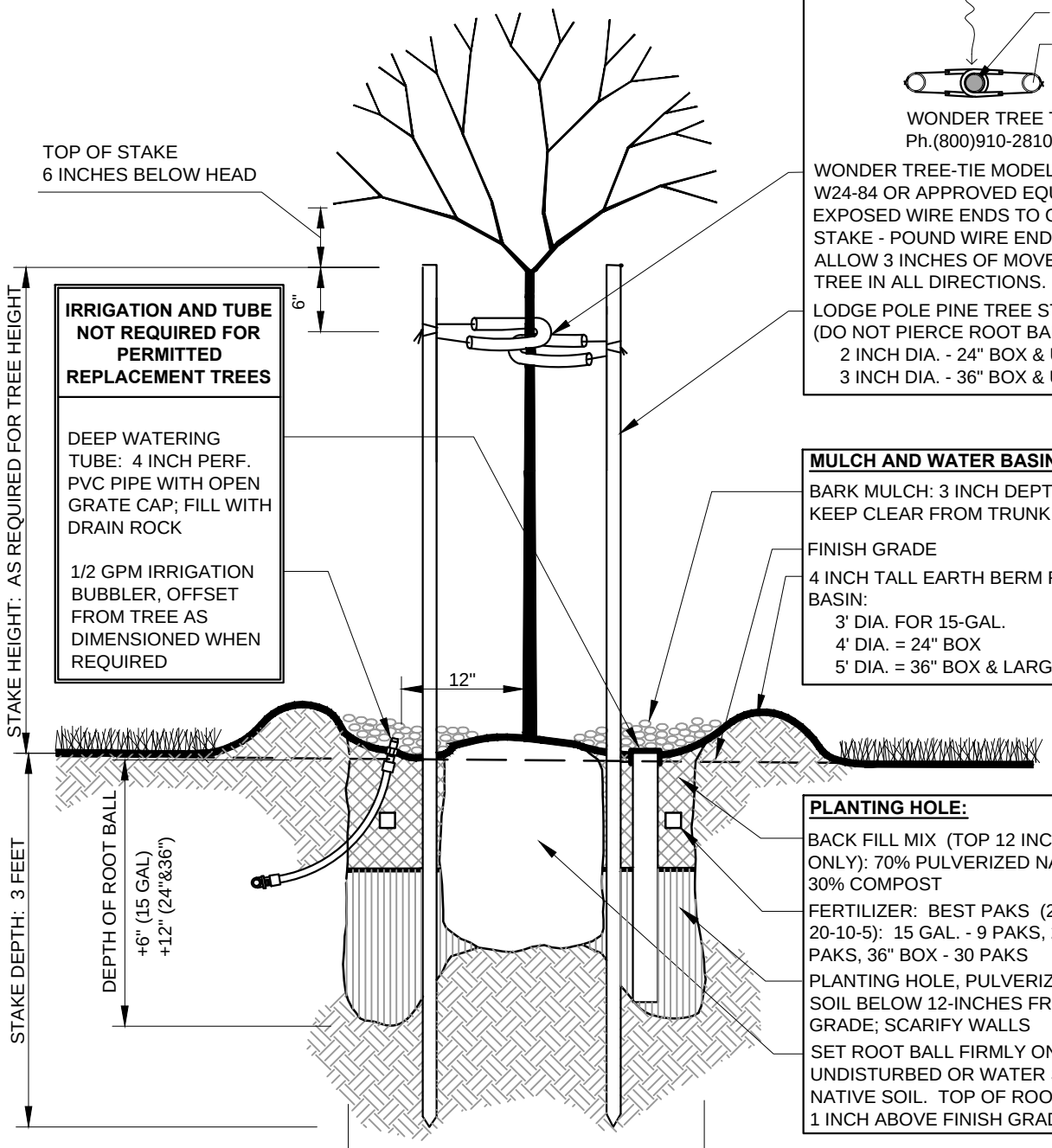

IRRIGATION AND TUBE NOT REQUIRED FOR PERMITTED REPLACEMENT TREES

DEEP WATERING TUBE: 4 INCH PERF. PVC PIPE WITH OPEN GRATE CAP; FILL WITH DRAIN ROCK

1/2 GPM IRRIGATION BUBBLER, OFFSET FROM TREE AS DIMENSIONED WHEN REQUIRED

STAKING AND TYING TREE:

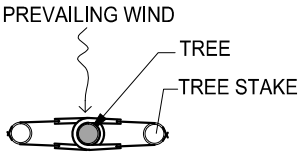

WONDER TREE TIE
Ph.(800)910-2810

WONDER TREE-TIE MODEL# W14-46, W24-84 OR APPROVED EQUAL. SECURE EXPOSED WIRE ENDS TO OUTSIDE OF STAKE - POUND WIRE ENDS INTO STAKE. ALLOW 3 INCHES OF MOVEMENT OF TREE IN ALL DIRECTIONS.

LODGE POLE PINE TREE STAKES (DO NOT PIERCE ROOT BALL):
2 INCH DIA. - 24" BOX & UNDER,
3 INCH DIA. - 36" BOX & UP

MULCH AND WATER BASIN:

BARK MULCH: 3 INCH DEPTH, KEEP CLEAR FROM TRUNK OF TREE

FINISH GRADE

4 INCH TALL EARTH BERM FOR WATER BASIN:
3' DIA. FOR 15-GAL.
4' DIA. = 24" BOX
5' DIA. = 36" BOX & LARGER

PLANTING HOLE:

BACK FILL MIX (TOP 12 INCHES ONLY): 70% PULVERIZED NATIVE SOIL, 30% COMPOST

FERTILIZER: BEST PAKS (21 GRAM, 20-10-5): 15 GAL. - 9 PAKS, 24" BOX - 25 PAKS, 36" BOX - 30 PAKS

PLANTING HOLE, PULVERIZED NATIVE SOIL BELOW 12-INCHES FROM FINISH GRADE; SCARIFY WALLS

SET ROOT BALL FIRMLY ON UNDISTURBED OR WATER SETTLED NATIVE SOIL. TOP OF ROOT BALL 1 INCH ABOVE FINISH GRADE.

WATERING BY HAND:

WATER TWICE WEEKLY DURING THE GROWING SEASON. APPLY 7½ TO 10 GALLONS DURING EACH WATERING. FILL WATER BASIN SLOWLY TO ALLOW WATER TO SOAK INTO SOIL .

PLANT HOLE DIAMETERS:
15 GAL: 3'-6"
24" BOX: 4'-6"
36" BOX: 6'-0"

NOTES:

1. KEEP TURF AND PLANTS OUTSIDE CIRCULAR EARTH BERM / WATER BASIN.
2. STREET TREES (TREES WITHIN CITY RIGHT-OF-WAY) SHALL BE:
   15 GALLON SIZE FOR SINGLE FAMILY RESIDENCE PERMIT REPLACEMENT TREE
   24 INCH BOX SIZE FOR ALL OTHER TREES

APPR	REVISED	DATE
	Council Revision	12/13/11
	General Revision	02/08/10

REVISIONS

CITY OF FREMONT
STANDARD DETAILS

CITY STANDARD
TREE PLANTING & STAKING

DATE APPROVED BY CITY COUNCIL 12/13/11

RESOLUTION NO. 2006-31

CITY ENGINEER

FILE NO.	SCALE	DRAWN	CHECKED	DATE	DWG NO.	
LSD-1.DWG	3/4" = 1'-0"	PM/MM	RER	DEC. 2011	LSD - 1	1 of 1

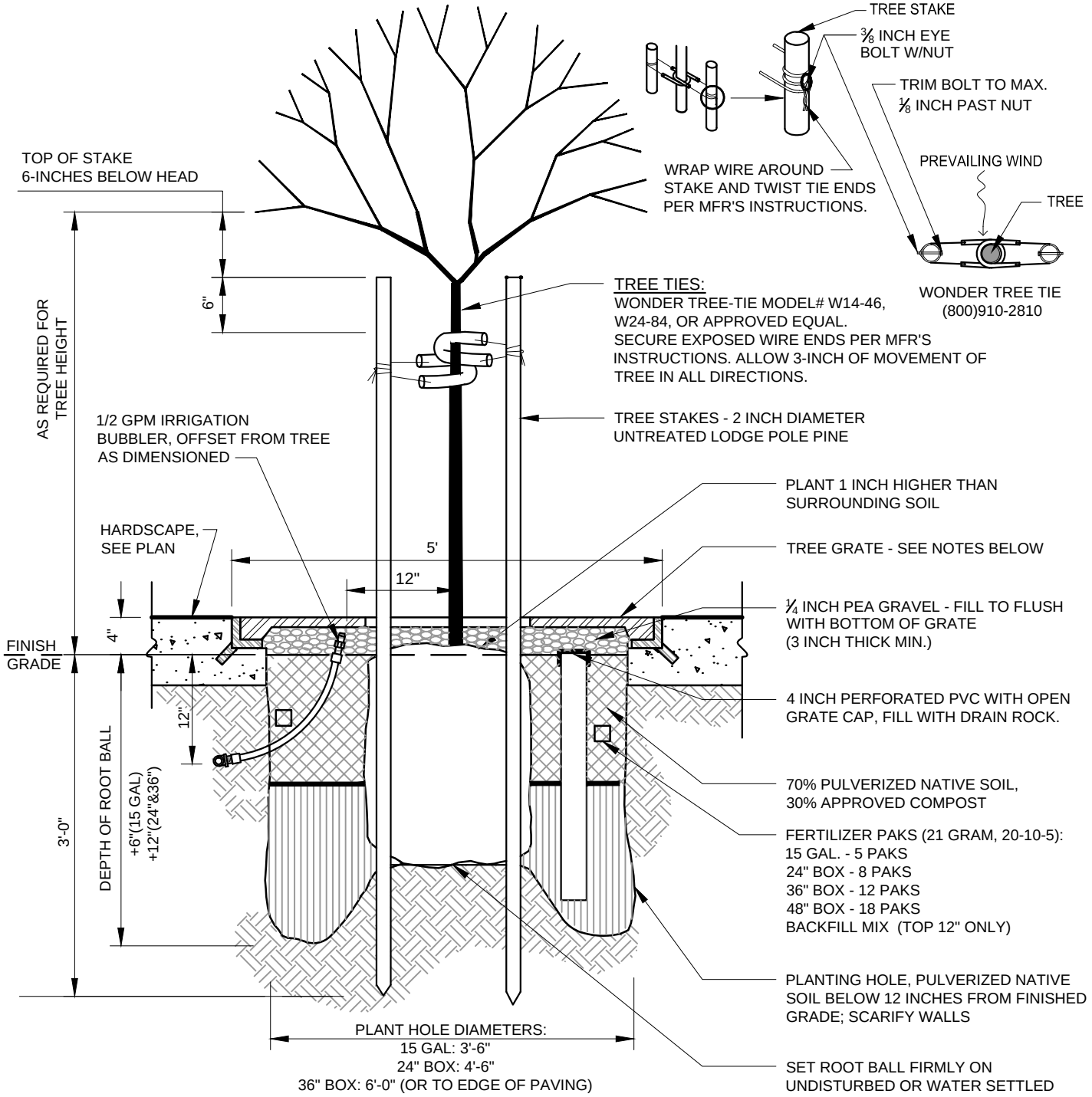

PLANTING NOTES:

1. TREE GRATE TO BE FIVE (5) FOOT SQUARE, MAKE AND MODEL TO BE: NEENAH, R-8707, OR APPROVED EQUAL.
2. TREE GRATE TO BE UNFINISHED.
3. REFER TO DETAIL LSD-1 FOR MORE INFORMATION.
4. STREET TREES (TREES WITHIN RIGHT-OF-WAY) SHALL BE 24 INCH BOX SIZE, MINIMUM.

APPR	REVISED	DATE

REVISIONS

CITY OF FREMONT

STANDARD DETAILS

CITY STANDARD TREE PLANTING WITH TREE GRATE

DATE APPROVED BY CITY COUNCIL 04/11/06

RESOLUTION NO. 2006-31

CITY ENGINEER

FILE NO.	SCALE	DRAWN	CHECKED	DATE	DWG NO.	
LSD-2.DWG	3/4" = 1'-0"	PM/MM	RER	NOV. 2005	LSD-2	1 of 1

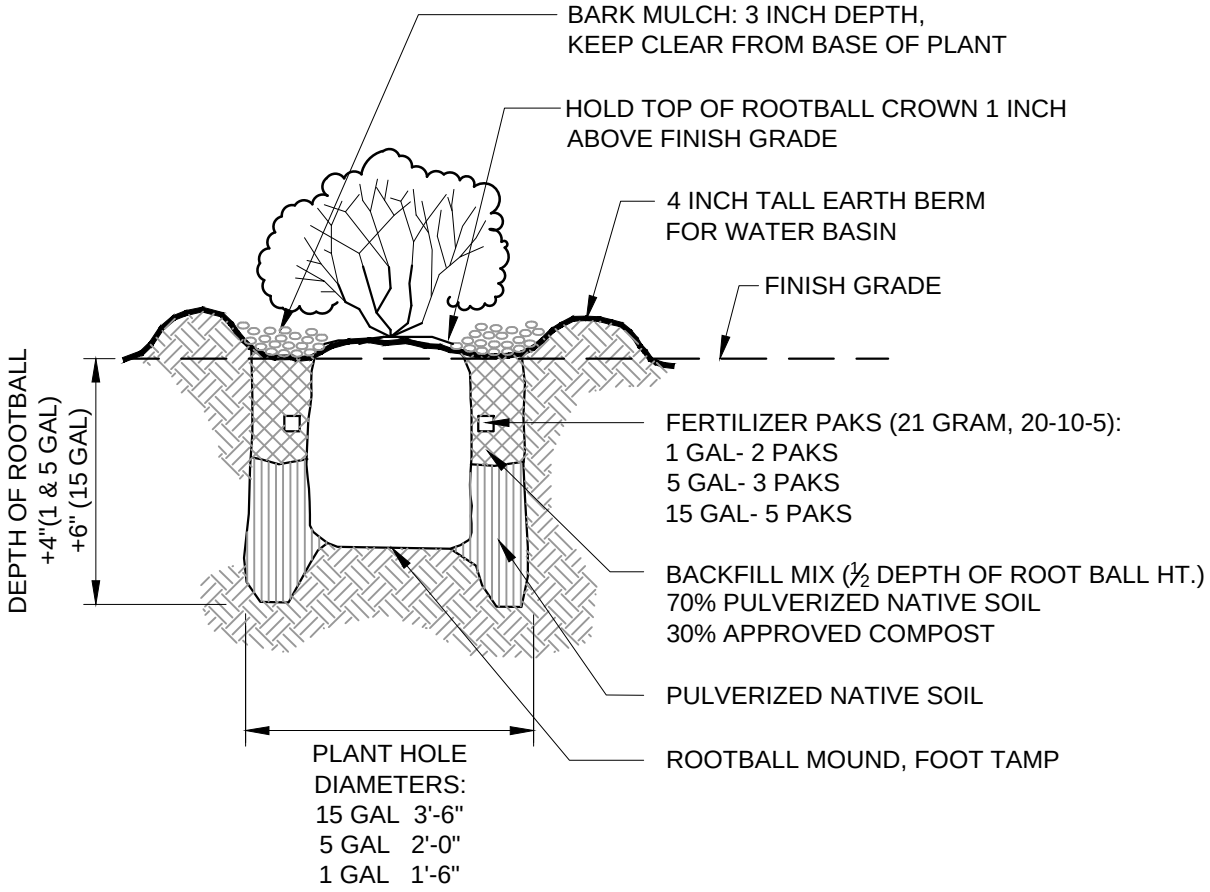

APPR	REVISED	DATE

REVISIONS

CITY OF FREMONT

STANDARD DETAILS

CITY STANDARD

SHRUB AND GROUNDCOVER PLANTING

DATE APPROVED BY CITY COUNCIL 04/11/06

RESOLUTION NO. 2006-31

CITY ENGINEER

FILE NO.	SCALE	DRAWN	CHECKED	DATE	DWG NO.	
LSD-3.DWG	3/4" = 1'-0"	PM/MM/AK	RER	NOV. 2005	LSD-3	1 of 1

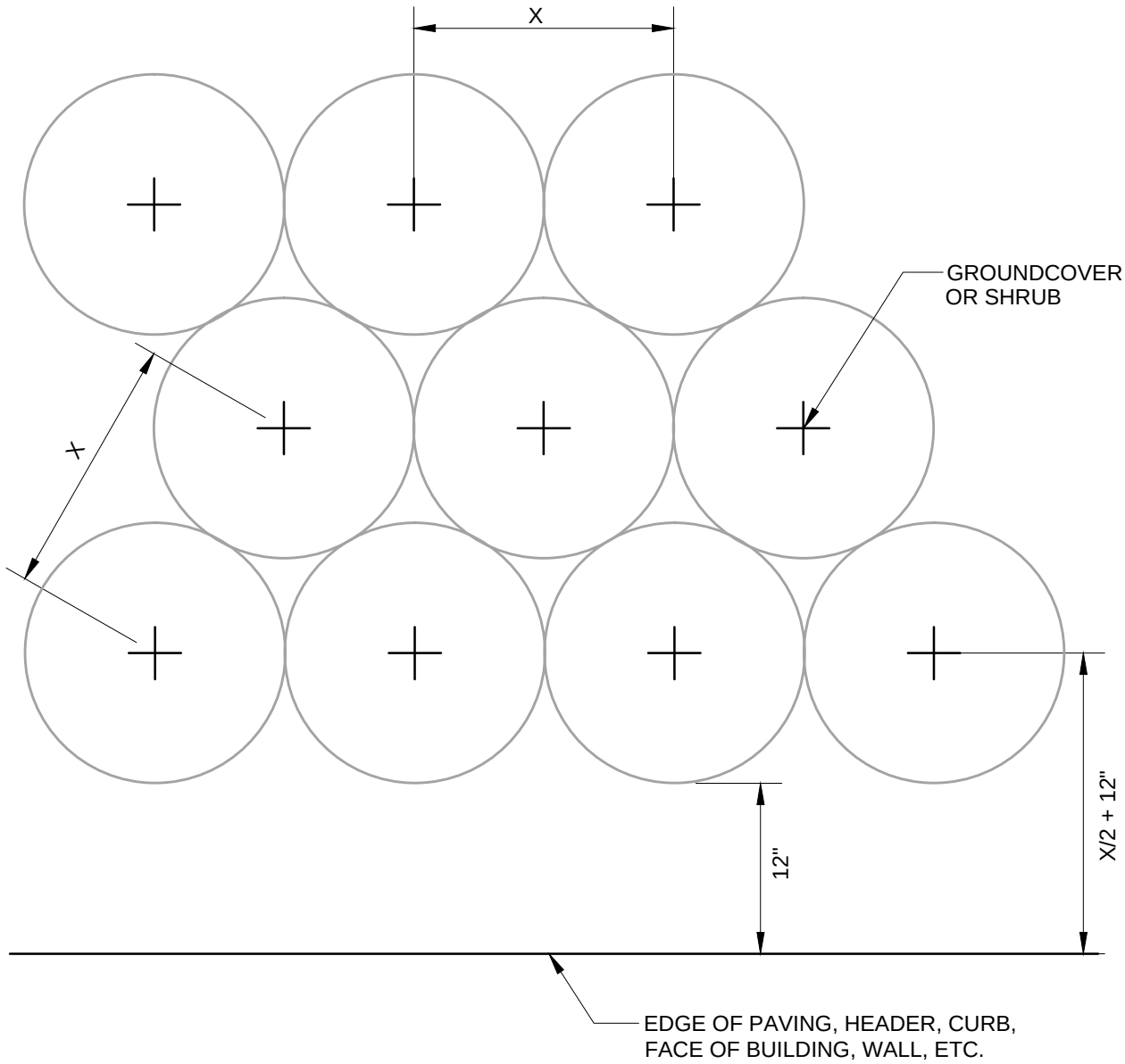

NOTE:

1. 'X' IS GROUNDCOVER AND SHRUB SPACING PER THE LANDSCAPE PLAN, PLANT LIST, AND LEGEND.
2. KEEP MULCH CLEAR OF PLANT BASE (SEE LSD-3 & LSD-12)

APPR	REVISED	DATE
	Council Revision	12/13/11
	General Revision	03/17/11

REVISIONS

CITY OF FREMONT

STANDARD DETAILS

CITY STANDARD

SHRUB AND GROUNDCOVER

PLANTING LAYOUT

DATE APPROVED BY CITY COUNCIL 12/13/11

RESOLUTION NO. 2006-31

CITY ENGINEER

FILE NO.	SCALE	DRAWN	CHECKED	DATE	DWG NO.	
LSD-4.DWG	1" = 1'-0"	PM/MM	RER	DEC. 2011	LSD-4	1 of 1

MINIMUM STREET TREE CLEARANCES

1. STREET TREES SHALL BE LOCATED 8 FEET (MIN) FROM SANITARY SEWER, GAS, AND STORMWATER LINES.
2. STREET TREES SHALL BE LOCATED 5 FEET (MIN) FROM WATER, TELEPHONE AND ELECTRICAL LINES.
3. STREET TREES SHALL BE LOCATED 5 FEET (MIN) FROM FIRE HYDRANTS.
4. STREET TREES SHALL BE LOCATED 15 FEET (MIN) FROM STREET LIGHTS.
5. STREET TREES SHALL BE LOCATED 8 FEET (MIN) FROM DRIVEWAYS AND 4 FEET (MIN) AT CUL-DE-SAC.
6. STREET TREES SHALL BE GENERALLY 35 FEET ON CENTER.
7. STREET TREES SHALL BE LOCATED 15 FEET (MIN) FROM CURB RETURNS.
8. MINIMUM ONE TREE PER LOT REQUIRED, AND TWO PER CORNER LOT.
9. IF LOT WIDTH EXCEEDS 60 FEET AT THE STREET, ONE TREE IS REQUIRED EVERY 35 FEET OF STREET, EXCLUDING LENGTH OF CURB RETURN.

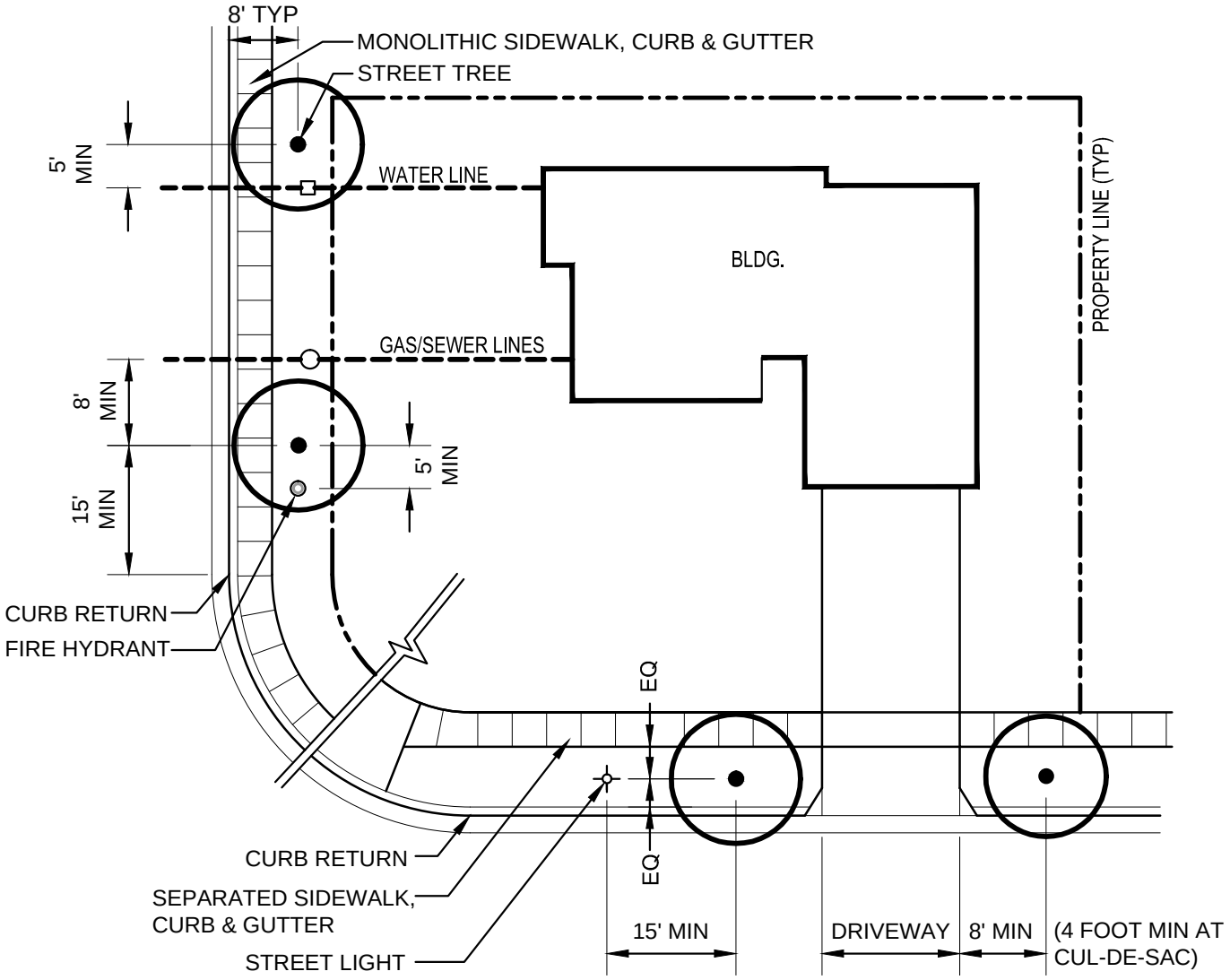

NOTE:
CURRENT STANDARD DETAIL AT CITY ENGINEERING DIVISION SHALL PREVAIL

APPR	REVISED	DATE

REVISIONS

CITY OF FREMONT

STANDARD DETAILS

CITY STANDARD

STREET TREE CLEARANCES

DATE APPROVED BY CITY COUNCIL 04/11/06

RESOLUTION NO. 2006-31

CITY ENGINEER

FILE NO.	SCALE	DRAWN	CHECKED	DATE	DWG NO.	
LSD-05.DWG	1" = 20'-0"	PM/MM	RER	OCT. 2005	LSD-5	1 of 1

MINIMUM TREE CLEARANCES FROM BUILDINGS

BRANCHES FROM MATURE TREES MAY NOT OVERHANG BUILDINGS AND ROOFS. ADEQUATE SPACE TO PLANT TREES ADJACENT TO BUILDINGS OR OTHER BUILT FEATURES MUST BE PROVIDED IN THE FOLLOWING MINIMUM WAYS:

1. SMALL TREES (TO 15 FEET TALL AT MATURITY) NO CLOSER THAN 6 FEET FROM BUILDING OR 2 FEET* FROM PAVING, CURBS, OR WALLS WITH A MINIMUM PLANTING AREA 5 FEET WIDE.
2. MEDIUM TREES (TO 35 FEET TALL AT MATURITY) NO CLOSER THAN 10 FEET FROM BUILDING OR 3 FEET* FROM PAVING, CURBS, OR WALLS WITH A MINIMUM PLANTING AREA 6 FEET WIDE.
3. LARGE TREES (ABOVE 35 FEET TALL AT MATURITY) NO CLOSER THAN 15 FEET FROM BUILDING ORE 3 FEET* FROM PAVING, CURBS, OR WALLS WITH A MINIMUM PLANTING AREA 6 FEET WIDE, PREFERABLY 8 FEET WIDE.
4. WHEN ROOF EAVES OR BUILDING PROJECTIONS EXTEND BEYOND FACE OF BUILDING, CLEARANCE SHALL BE MEASURED FROM EDGE OF PROJECTION TO CENTERLINE OF TREE.
5. UPPER STORY OVERHANGS AND BUILDING FEATURES MAY NOT EXTEND WITHIN MINIMUM CLEARANCE EXCEPT FOR MINOR ROOF EAVES.

* REFER TO CITY STANDARD DETAIL LSD-05 FOR REQUIRED SPACING FROM UTILITIES.

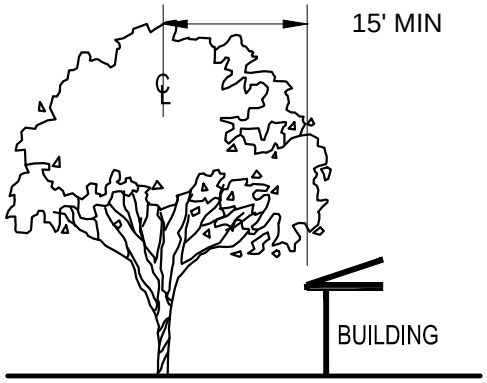

LARGE TREE

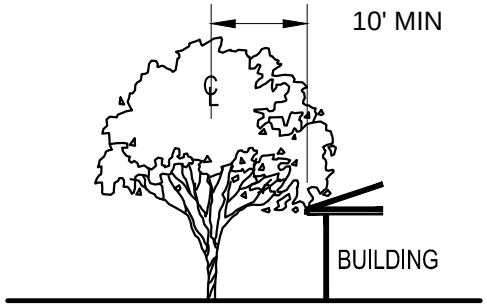

MEDIUM TREE

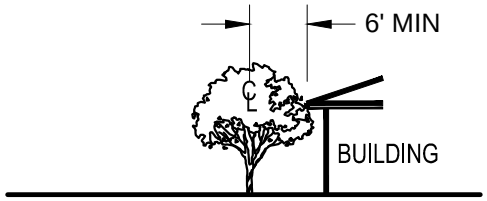

SMALL TREE

APPR	REVISED	DATE

REVISIONS

CITY OF FREMONT

STANDARD DETAILS

CITY STANDARD TREE CLEARANCES

DATE APPROVED BY CITY COUNCIL 04/11/06

RESOLUTION NO. 2006-31

CITY ENGINEER

FILE NO.	SCALE	DRAWN	CHECKED	DATE	DWG NO.	
LSD-6.DWG	1"=20'-0"	MQ/MM	RER	NOV. 2005	LSD-6	1 of 1

NOTES:

1. CURRENT STANDARD DETAIL AT CITY ENGINEERING DIVISION SHALL PREVAIL.
2. CROWN TO BE ROUNDED WITH NO SHARP GRADE BREAKS.
3. MINIMIZE VISIBLE EXPOSED GROUT AT COBBLE JOINTS.
4. SURFACE OF COBBLE FIELD TO BE SMOOTH AND FLAT TO GRADE WITHOUT VARIATION IN HEIGHT OF INDIVIDUAL COBBLES.
5. COBBLES WITH BREAKS OR FRACTURES ARE NOT ALLOWED.
6. ROCK SHALL BE 'SATURATED SURFACE MOIST' (SSM) PRIOR TO PLACEMENT.
7. CONCRETE MORTAR BED SHALL HAVE A CEMENT RATIO PER CUBIC YARD OF CONCRETE OF NOT LESS THAN 564 POUNDS; SLUMP MAX. OF 3"; AGGREGATE SIZE ¼" MAXIMUM.
8. INTEGRAL COLOR ADMIXTURE: CHROMIX, ADOBE TAN, #C-21 BY L.M. SCOFIELD.

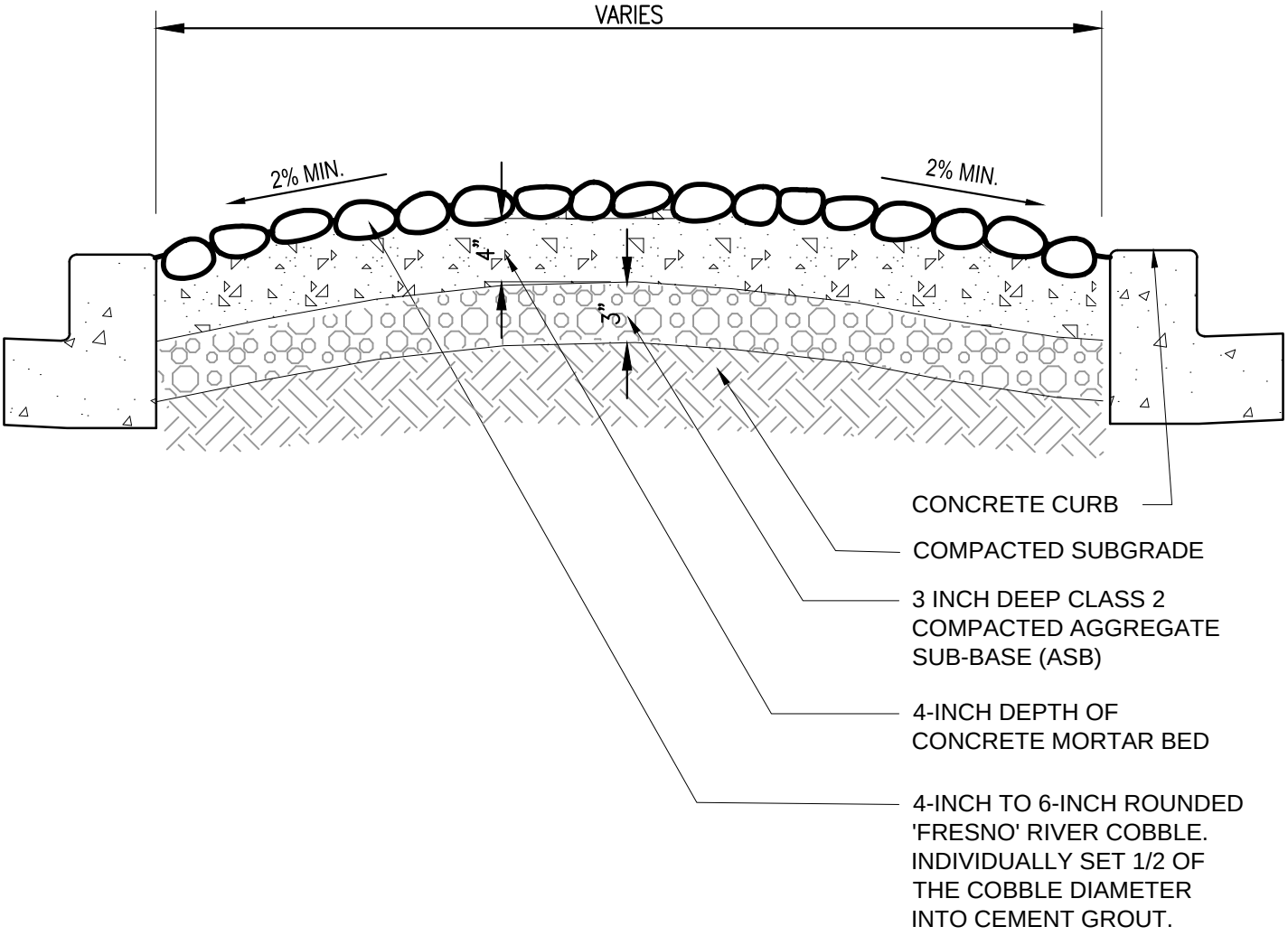

APPR	REVISED	DATE

REVISIONS

CITY OF FREMONT

STANDARD DETAILS

CITY STANDARD MEDIAN PAVING COBBLE

DATE APPROVED BY CITY COUNCIL 04/11/06

RESOLUTION NO. 2006-31

CITY ENGINEER

FILE NO.	SCALE	DRAWN	CHECKED	DATE	DWG NO.	
LSD-7.DWG	1" = 1'-0"	PM/MM	RER	NOV. 2005	LSD-7	1 of 1

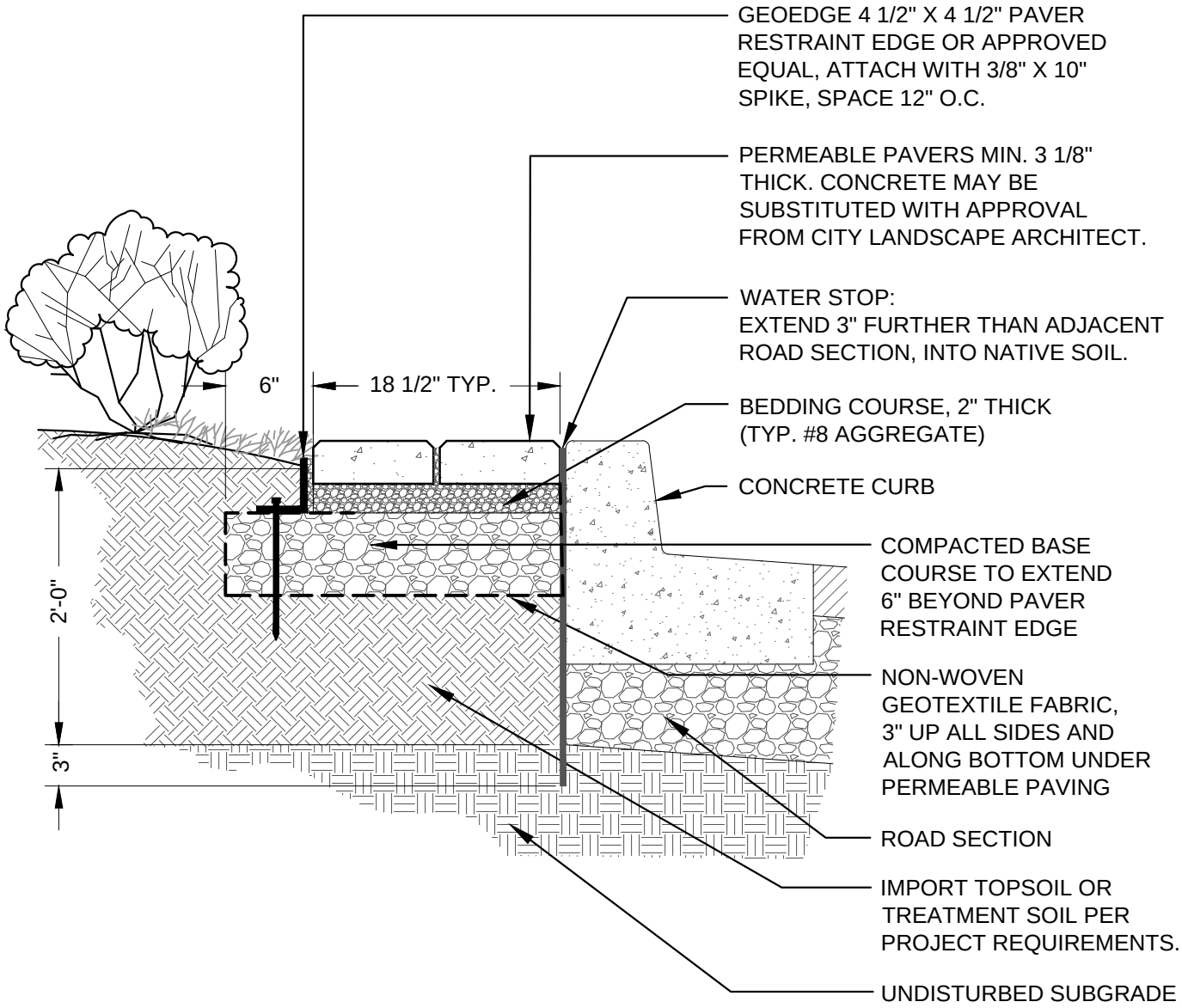

NOTES:

1. ON MEDIANS LESS THAN 14 FEET WIDE, REPLACE MAINTENANCE BAND WITH 18 INCH MINIMUM WIDTH PLANTING OF WALKABLE GROUNDCOVER.
2. IF CONRETE, INSTALL 'DEEP JOINTS' TO MATCH CURB & GUTTER DEEP JOINTS. SEE ENGINEERING STANDARD DETAIL 8 FOR DEFINITION OF 'DEEP JOINT.'
3. IF PAVERS ARE TO BE SET ADJACENT TO AN EXISTING TREE HAND EXCAVATE ALL AREAS WITHIN TREE DRIPLINE. SEE LSD-9 FOR TREE PRESERVATION NOTES.
4. PAVERS TO BE: 6 X 9 X 3 1/8 CALSTONE PERMEABLE PAVING UNITS, COLOR: RUSTIC YELLOW STONE, UNLESS APPROVED BY THE CITY LANDSCAPE ARCHITECT.

			CITY OF FREMONT STANDARD DETAILS			DATE APPROVED BY CITY COUNCIL 12/13/11	
						RESOLUTION NO. 2006-31	
	Council Revision	12/13/11	CITY STANDARD MAINTENANCE BAND			Kam Hughes	
APPR	REVISED	DATE				CITY ENGINEER	
REVISIONS							
FILE NO. LSD-8.DWG	SCALE 1" = 1'-0"		DRAWN PM/MM	CHECKED RER	DATE DEC. 2011	DWG NO. LSD-8	1 of 1

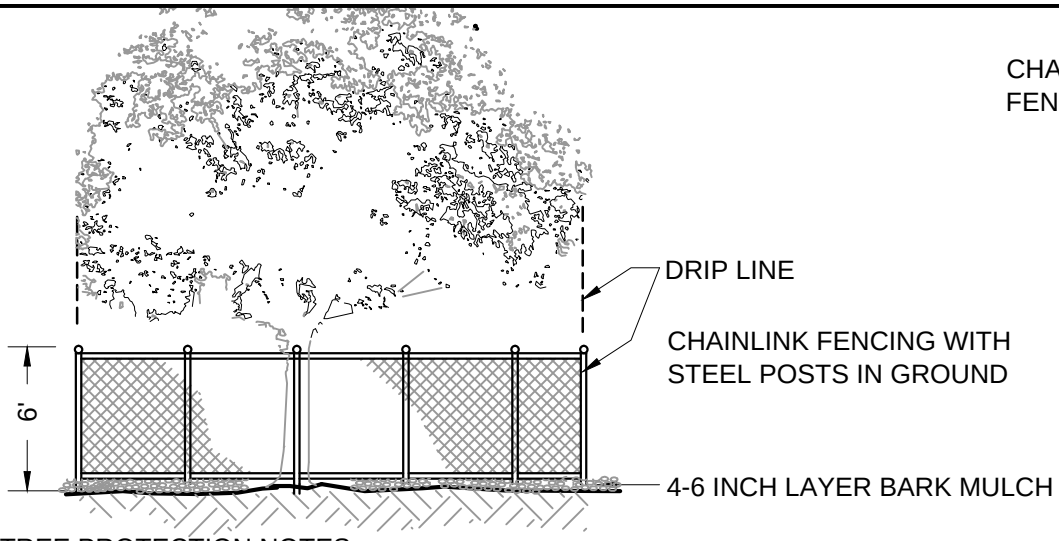

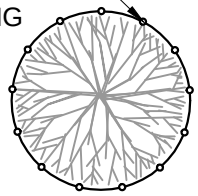

PLAN VIEW

TREE PROTECTION NOTES

1. CURRENT STANDARD DETAIL AT CITY ENGINEERING DIVISION SHALL PREVAIL.
2. TREE PROTECTION MEASURES MUST BE IN PLACE BEFORE CONSTRUCTION, DEMOLITION AND/OR GRADING ACTIVITIES COMMENCE. CITY OF FREMONT WILL STOP CONSTRUCTION IF TREE PROTECTION MEASURES ARE NOT IN PLACE AND MAINTAINED THROUGHOUT THE CONSTRUCTION PERIOD.
3. TREES CALLED OUT FOR PRESERVATION SHALL BE FENCED AT THE DRIPLINE. FENCING MAY OCCUR AT THE COMBINED DRIPLINES OF GROVES OF TREES. PLACE 4-6 INCH BARK MULCH BENEATH DRIPLINES OF TREES TO BE PRESERVED. KEEP BARK 2-3 FEET FROM TREE TRUNK.
4. FENCING SHALL BE 6 FEET TALL CHAIN LINK FENCING WITH STEEL POSTS EMBEDDED IN THE GROUND.
5. NO GRADING SHALL OCCUR WITHIN THE DRIPLINES/FENCED AREA OF EXISTING TREES.
6. NO CONSTRUCTION MATERIALS OR CONSTRUCTION VEHICLES MAY BE STORED WITHIN THE DRIPLINES/FENCED AREA OF EXISTING TREES.
7. CONSTRUCTION VEHICLES OR MACHINERY MAY NOT PASS BETWEEN TWO OR MORE EXISTING TREES IDENTIFIED FOR PRESERVATION IF THEIR CANOPIES ARE WITHIN 10 FEET OF TOUCHING. ADDITIONAL FENCING MAY BE REQUIRED BY THE CITY AS NEEDED.
8. THE CONTRACTOR IS REQUIRED TO HAVE AN ARBORIST CERTIFIED BY THE INTERNATIONAL SOCIETY OF ARBORICULTURE (ISA), APPROVED BY THE CITY, ON SITE IF SITE CONSTRUCTION EFFORTS REQUIRE REMOVAL OF EXISTING ROOTS OR BRANCH PRUNING. ROOTS APPROVED FOR CUTTING MUST BE CUT CLEANLY WITH A SAW. RIPPING OR SHREADING ROOTS SUBJECT TO FINE/PENALTY.
9. UNAUTHORIZED TREE REMOVAL IS SUBJECT TO REPLACEMENT EQUAL TO THE APPRAISED VALUE OF THE TREE LOST PER FMC 4-5108.
10. THE CONTRACTOR IS REQUIRED TO WATER, FERTILIZE AND ATTEND TO OTHER MAINTENANCE NEEDS OF EXISTING TREES TO MAINTAIN HEALTHY GROWTH THROUGHOUT THE CONSTRUCTION PERIOD. AN EARTH BERM MEASURING MINIMUM 6 FEET IN DIAMETER, AND 6 INCHES IN HEIGHT SHALL BE CONSTRUCTED AT THE BASE OF EACH TREE TO FUNCTION AS A TEMPORARY WATERING BASIN DURING THE CONSTRUCTION PERIOD. TREES SHALL BE WATERED ACCORDING TO WEATHER AND TREE SPECIES REQUIREMENTS.
11. IF TREES ARE BEING RELOCATED: RELOCATION OF EXISTING TREES SHALL OCCUR UNDER THE OBSERVATION AND DIRECTION OF A CERTIFIED ARBORIST APPROVED BY THE CITY OF FREMONT.
12. TRUNK WRAP PROTECTION SHALL OCCUR FOR TREES SITUATED IN SMALL TREE WELLS OR SIDEWALK PLANTERS. THIS FORM OF PROTECTION WILL BE ALLOWED BY APPROVAL FROM SENIOR LANDSCAPE ARCHITECT ONLY. REFER TO LSD-10.

APPR	REVISED	DATE
	Council Revision	12/13/11

REVISIONS

CITY OF FREMONT

STANDARD DETAILS

CITY STANDARD

TREE PROTECTION FENCING

DATE APPROVED BY CITY COUNCIL 12/13/11

RESOLUTION NO. 2006-31

CITY ENGINEER

FILE NO.	SCALE	DRAWN	CHECKED	DATE	DWG NO.	
LSD-9.DWG	1/8" = 1'-0"	PM/MM	RER	DEC. 2011	LSD-9	1 of 1

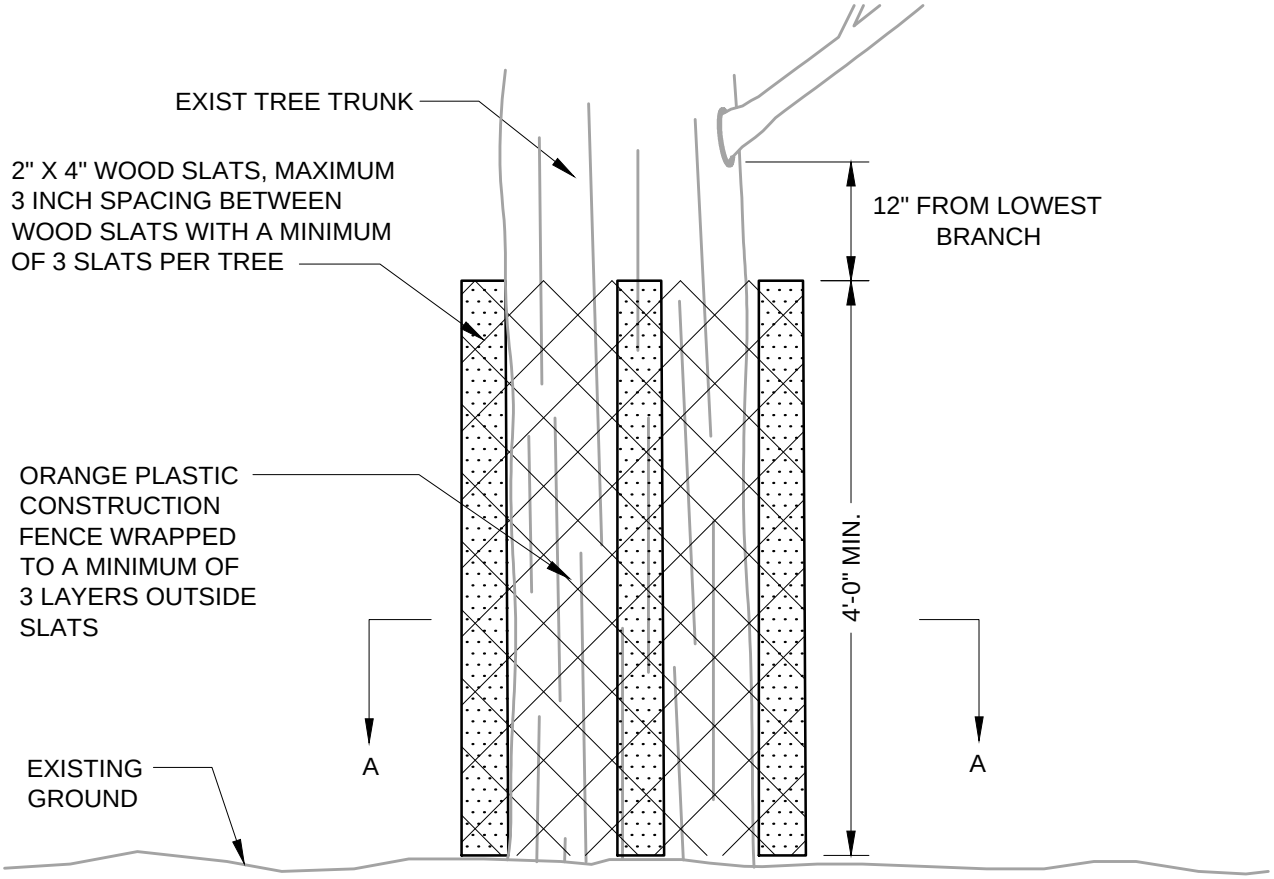

ELEVATION

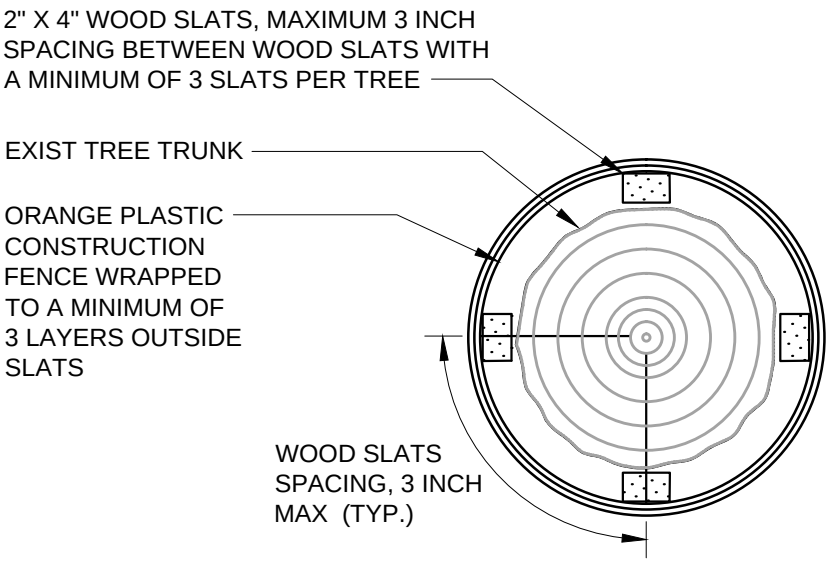

SECTION A-A

NOTE:

1. WRAP ORANGE PLASTIC CONSTRUCTION FENCE ON TOP OF WOOD SLATS WITH AN OVERLAP OF 12 INCHES AND TIE WITH WIRE. SEE SECTION BELOW.
2. TEMPORARY TRUNK WRAP PROTECTION WILL BE ALLOWED ONLY BY APPROVAL FROM THE SENIOR LANDSCAPE ARCHITECT
3. DAMAGE TO BRANCHES & ROOTS SUBJECT TO FINE UP TO APPRAISED VALUE OF THE TREE, PER CITY TREE PRESERVATION ORDINANCE (FMC 4-5100).
4. REFER TO LSD-9 FOR ADDITIONAL TREE PROTECTION REQUIREMENTS APPLICABLE TO THIS DETAIL.
5. TRUNK WRAP SHALL BE IN PLACE NO MORE THAN 5 WORKING DAYS BEFORE WORK ADJACENT TO TREE, AND REMOVED NO MORE THAN 5 WORKING DAYS AFTER WORK ADJACENT TO THE TREE, UNLESS OTHERWISE APPROVED BY THE CITY.

APPR	REVISED	DATE
	Council Revision	12/13/11

REVISIONS

CITY OF FREMONT

STANDARD DETAILS

CITY STANDARD

TEMPORARY TRUNK WRAP PROTECTION

DATE APPROVED BY CITY COUNCIL 12/13/11

RESOLUTION NO. 2006-31

CITY ENGINEER

FILE NO.	SCALE	DRAWN	CHECKED	DATE	DWG NO.	
LSD-10.DWG	3/4"=1'-0"	PN/MM	RER	DEC. 2011	LSD-10	1 of 1

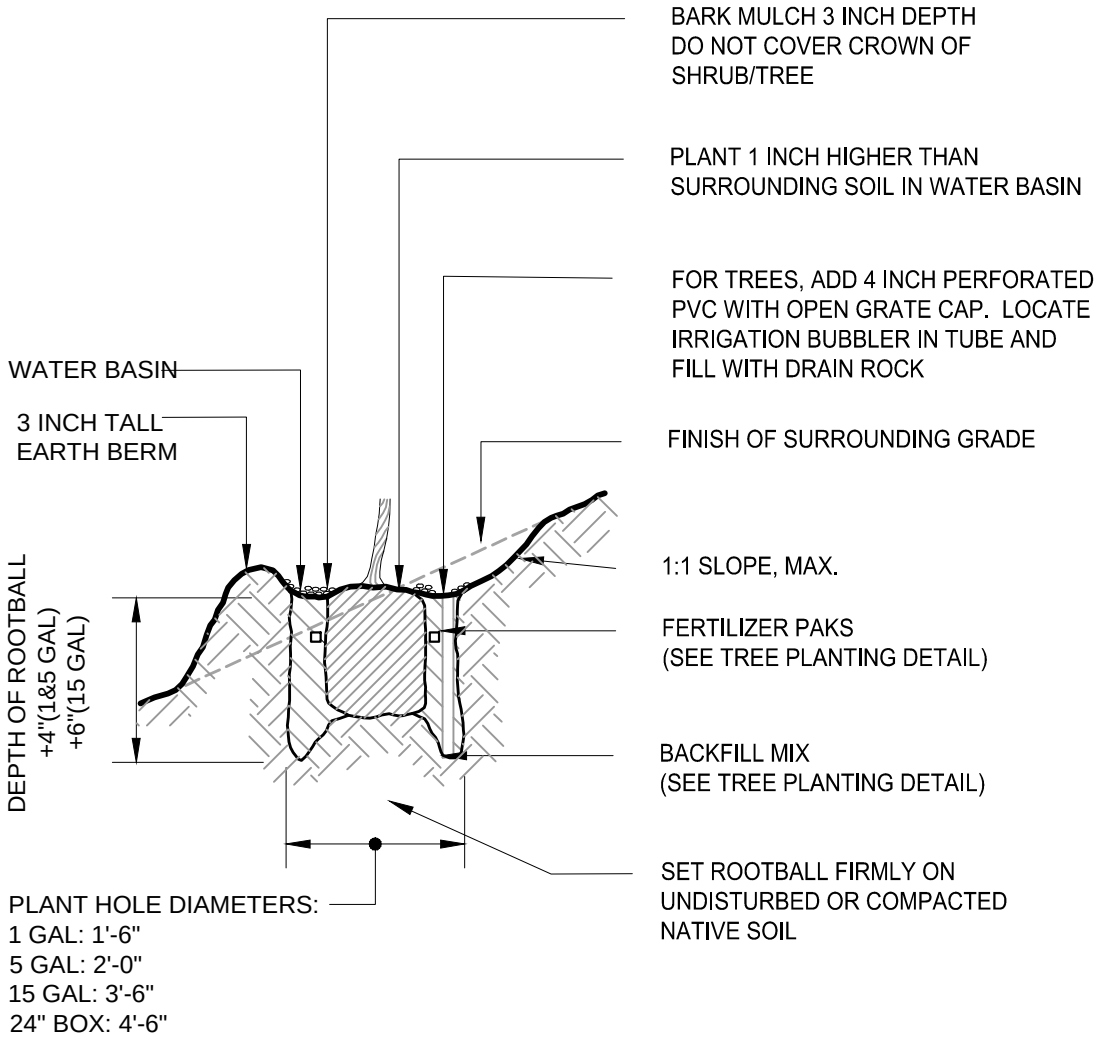

NOTES:

1. KEEP TURF AND PLANTS OUTSIDE THE EARTH BERM/WATER BASIN
2. SEE TREE PLANTING DETAIL FOR STAKING INFO.
3. THIS DETAIL TO BE REFERENCED, PER CITY STANDARD DETAIL LSD-11, FOR TREE PLANTING IN A VEGETATED BIOSWALE.

			CITY OF FREMONT STANDARD DETAILS			DATE APPROVED BY CITY COUNCIL 12/13/11	
						RESOLUTION NO. 2006-31	
	General Revision	**/**/****	CITY STANDARD TREE AND SHRUB PLANTING AT SLOPE			Kam Hughes	
APPR	REVISED	DATE				CITY ENGINEER	
REVISIONS							
FILE NO. LSD-12.DWG	SCALE 1/4" = 1'-0"		DRAWN AK/MM/PM	CHECKED RER	DATE NOV. 2005	DWG NO. LSD-12	1 of 1

TREE CHOICES ARE NOT LIMITED TO THIS LIST.
THIS LIST IS ONLY A GUIDE.

CITY OF FREMONT
STANDARD DETAILS
CITY STANDARD
TREE PLANTING GUIDE LIST

| TREE CHARACTERISTICS | | |

CITY OF FREMONT IRRIGATION STANDARD MATERIALS

STANDARD SYMBOL	DESCRIPTION	MANUFACTURER	MODEL # (if applicable)	COMMENTS	LANDSCAPE STANDARD DETAIL
C	Irrigation Controller w/ Enclosure	Calsense	ET 2000e	w/ all applicable software as required by the city, and dome antenna	LSD-15
	Irrigation Controller Enclosure	Calsense Enclosure	SSE-R	Heavy-Duty Stainless Steel	LSD-15
	Reduced Pressure-Principle Backflow Preventer with cage and concrete pad	Febco	825-Y		LSD-16
	Backflow Assembly Cage	Guardshack	GS Series	Powdercoat Black	LSD-17
	Irrigation Trench - Mainline		Sch. 40 PVC for 2" & less Class 315 PVC for 2-1/2" & larger	24" below fin. grade	LSD-18
	Irrigation Trench - Lateral line		Class 200 PVC for 1¼" and greater Sch. 40 PVC for line 1" & smaller	18" below fin. grade	LSD-18
	Sleeves		Class 315 PVC	Refer to LSD-18 for depth and size	LSD-18
	Quick-Coupling Valve (in box)	Hunter	HQ-44LRC-AW HR-44A	Winged body w/ 1" key, locking cover, and key	LSD-19
	Quick-Coupling Valve Box	Carson Pentek	910 Lockable Superflexon	10" Round box w/ lid	LSD-19
	Wire Splice	Scotchlok Y-spring connector		Install per detail LSD-20	LSD-20
	Turf Sprinklers	Toro Hunter	Super 700C Series I-40 OR I-20 365-XX, 360 d, ADJ	Large Turf Areas	LSD-21
	Turf Sprinklers	Toro	640 Series	Large Turf Areas	LSD-21
	Turf Sprinklers	Toro	570Z-6P/12P-O-T Precision Series	Small Turf Areas	LSD-21
	Shrub/Groundcover	Toro	570Z-6P/12P-O-T Precision Series	Shrub/Groundcover Areas	LSD-21
	Shrub Bubblers	Toro	PC-FB-25	Shrubs	
	Tree Bubblers	Toro	PC-FB-50	Trees	LSD-01
	Gate Valve (in box)	Nibco	T-113		LSD-22
	Gate Valve Box	Carson Pentek	910 Lockable Superflexon	10" Round box w/ lid	LSD-22
	Remote Control Valve (in box)	Griswold	2000 Series NC - Solenoid Valve 2230 Series NC - Pressure Reducing	NC = Normally Closed	LSD-23
	Remote Control Valve Box	Carson Pentek	1324 Lockable Superflexon	13" X 18" box w/ lid	LSD-23
Y	'Y' Strainer	Febco	650A 1/2"-2"		LSD-26
	Pressure Reducing Valve	Febco/Wilkins/Watts	XXX		LSD-25
FS	Flow Sensor	Calsense	FM-1B		LSD-24
MV	Master Valve	Griswold	2160 Series NO - Solenoid Valve	NO = Normally Open	LSD-24

Note: Symbols shown are city standard for those items

APPR	REVISED	DATE
	Council Revision	12/13/11
	General Revision	6/07/10

REVISIONS

CITY OF FREMONT
STANDARD DETAILS

CITY STANDARD
IRRIGATION MATERIALS

DATE APPROVED BY CITY COUNCIL 12/13/11

RESOLUTION NO. 2006-31

CITY ENGINEER

FILE NO.	SCALE	DRAWN	CHECKED	DATE	DWG NO.	
LSD-14.DWG	NONE	MAM/CC	RER	DEC. 2011	LSD-14	1 of 1

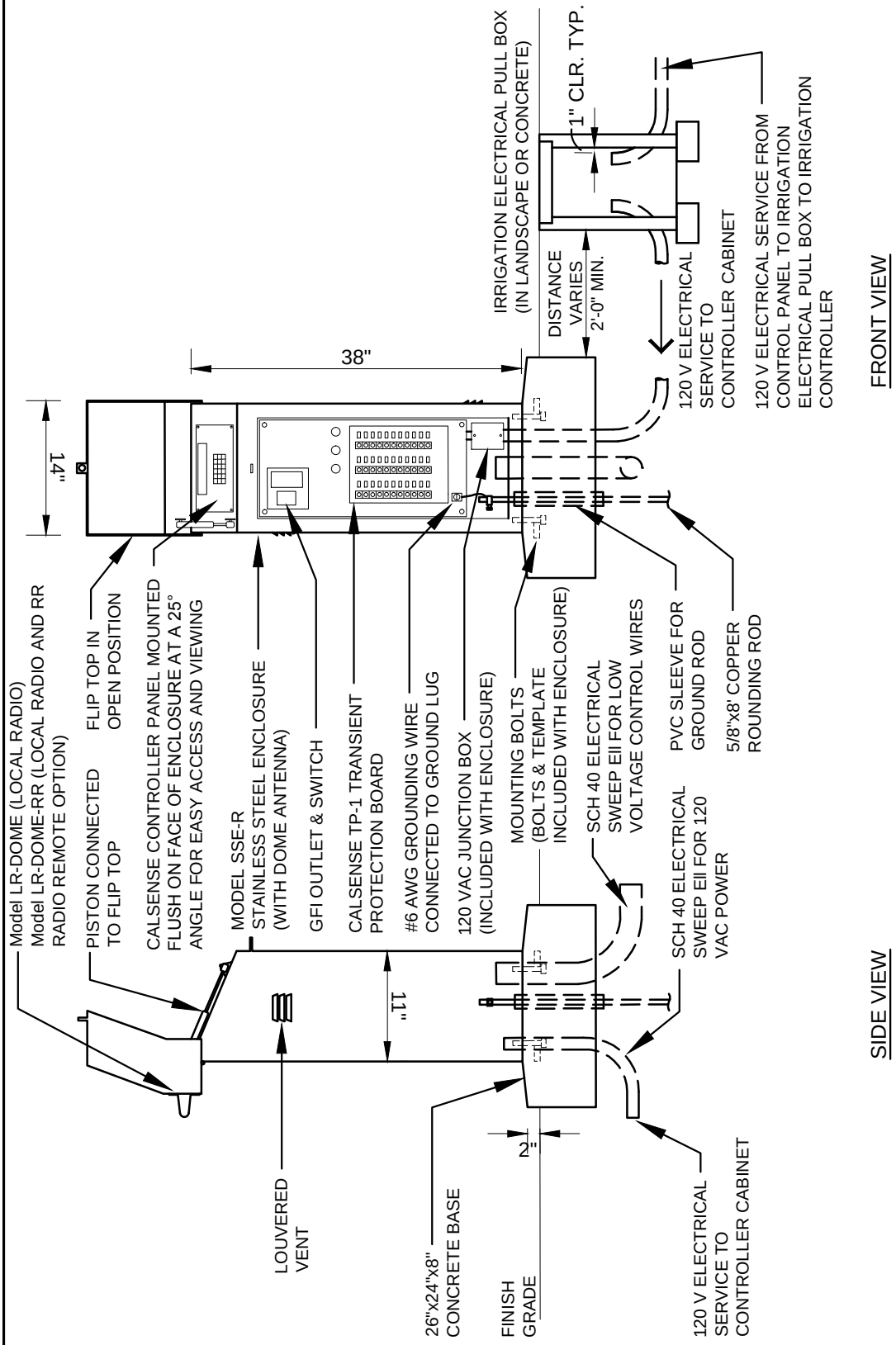

ELECTRICAL SERVICE FOR IRRIGATION CONTROLLER - PULL BOX

1. ALL NOTES RELATED TO UNDERGROUND SERVICE TO ELECTROLIERS SHALL APPLY TO THIS CONDITION FOR SUPPLYING 120 VOLT SERVICE TO IRRIGATION CONTROLLERS IN THE CITY RIGHT OF WAY.
2. ALL UNDERGROUND WIRING SHALL BE IN APPROVED CONDUIT. THE UNDERGROUND CONDUIT AND ALL METAL PARTS SHALL BE CONTINUOUSLY BONDED AND GROUNDED.
3. "IRRIGATION ELECTRICAL" SHALL BE THE TITLE INTEGRATED IN THE LID.
4. USE FELT PAPER TO BLOCK OPENING BETWEEN CONDUITS.

APPR	REVISED	DATE
	General Revision	**/**/****

REVISIONS

CITY OF FREMONT

STANDARD DETAILS

CITY STANDARD IRRIGATION CONTROLLER CABINET W/ CALSENSE CONTROLLER

DATE APPROVED BY CITY COUNCIL 12/13/11

RESOLUTION NO. 2006-31

CITY ENGINEER

FILE NO.	SCALE	DRAWN	CHECKED	DATE	DWG NO.	
LSD-15.DWG	3/4" = 1'-0"	AK/MM/PM	RER	NOV. 2005	LSD-15	1 of 1

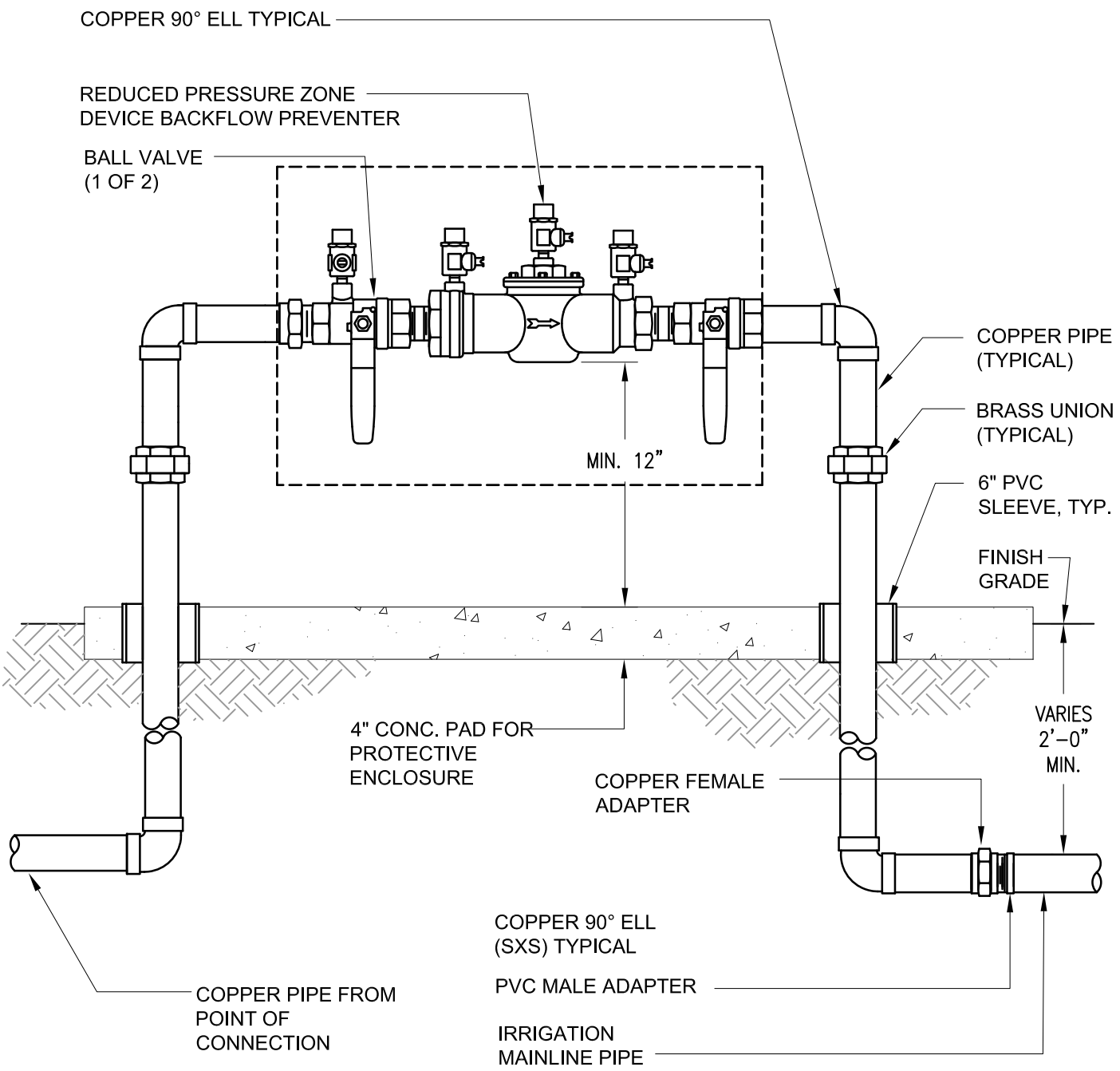

NOTES:

1. INSTALL BACKFLOW PREVENTER AS REQUIRED BY LOCAL CODES AND HEALTH DEPARTMENT. VERIFY LOCAL REQUIREMENTS PRIOR TO INSTALLATION.
2. INSTALL FREEZE PROTECTION JACKET AND CAGE. SEE CITY STANDARD DETAIL LSD-17 FOR CAGE DETAIL.
3. REFER TO CITY STANDARD DETAIL LSD-14 FOR ALL MATERIALS

1	MISC REVISIONS	9/09
APPR	REVISED	DATE
REVISIONS		

CITY OF FREMONT
STANDARD DETAILS

CITY STANDARD IRRIGATION BACKFLOW PREVENTER UNIT

DATE APPROVED BY CITY COUNCIL 12/13/11

RESOLUTION NO. 2006-31

CITY ENGINEER

FILE NO.	SCALE	DRAWN	CHECKED	DATE	DWG NO.	
LSD-16.DWG	1" = 1'-0"	PM/MM	RER	NOV. 2005	LSD-16	16 of 27

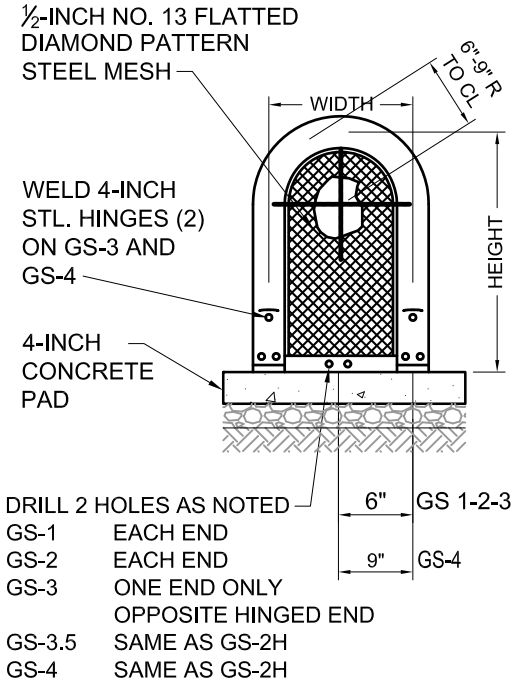

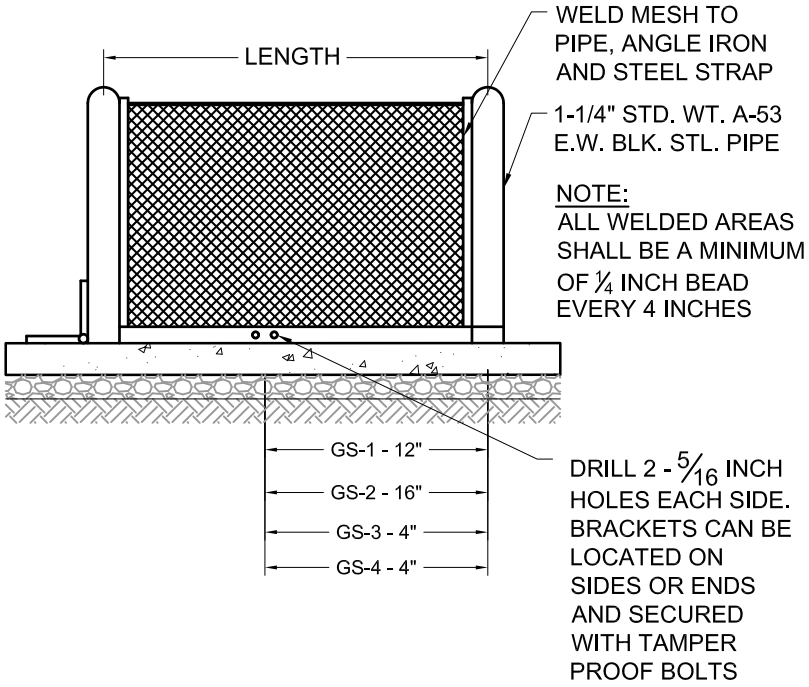

STD. SIZES	CENTERLINE DIMENSIONS		WEIGHT
GS-.5	12"W x 18"H x 12"L	LIFT OFF UNIT	35
GS-1	12"W x 24"H x 24"L	LIFT OFF UNIT	40
GS-2	12"W x 24"H x 32"L	LIFT OFF UNIT	45
GS-3	12"W x 24"H x 42"L	HINGED UNIT	51
GS-4	18"W x 30"H x 48"L	HINGED UNIT	67

NOTE:
GS = POWDER-COATED STEEL GUARDSHACK OR APPROVED EQUAL

NOTES:
1. AFTER ALL WELDING, ENTIRE UNIT SHALL BE PROCESSED WITH IRON PHOSPHATE PRE-TREATMENT. ELECTROSTATIC APPLICATION OF POWDER SHALL BE FUSION BONDED. POWDERCOAT COLOR SHALL BE BLACK.
2. ALL BOLTS FOR HINGES AND HASPS SHALL BE ZINC-PLATED TAMPER PROOF, EXCEPTION - USE SS HARDWARE FOR SS UNITS.
   SS = STAINLESS STEEL
3. REFER TO SPECIFICATIONS FOR MODEL NUMBER
4. REFER TO CITY STANDARD DETAIL LSD-14 FORALL MATERIALS

APPR	REVISED	DATE

REVISIONS

CITY OF FREMONT
STANDARD DETAILS
CITY STANDARD
BACKFLOW PREVENTER UNIT ENCLOSURE

DATE APPROVED BY CITY COUNCIL 12/13/11
RESOLUTION NO. 2006-31
CITY ENGINEER

FILE NO.	SCALE	DRAWN	CHECKED	DATE	DWG NO.	
LSD-17.DWG	1/2" = 1'-0"	AK/MM/PN	RER	NOV. 2005	LSD-17	1 of 1

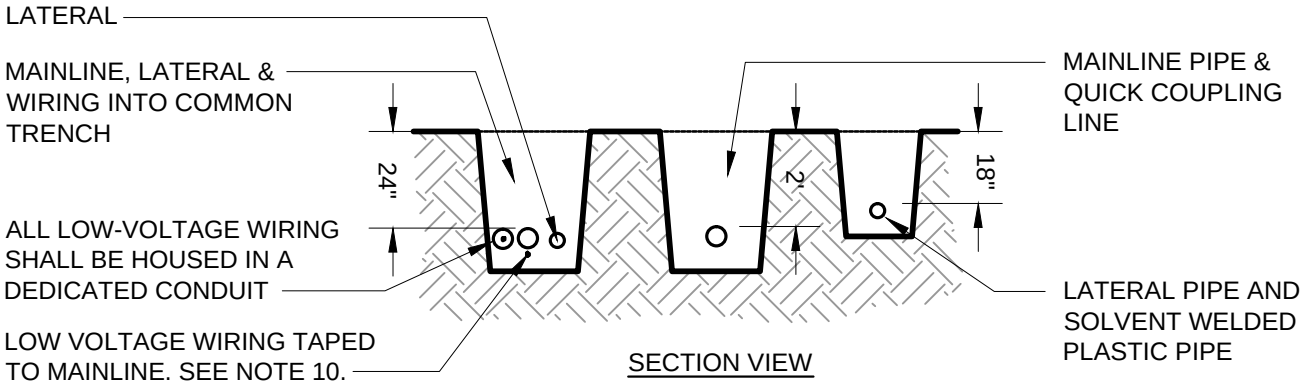

SECTION VIEW

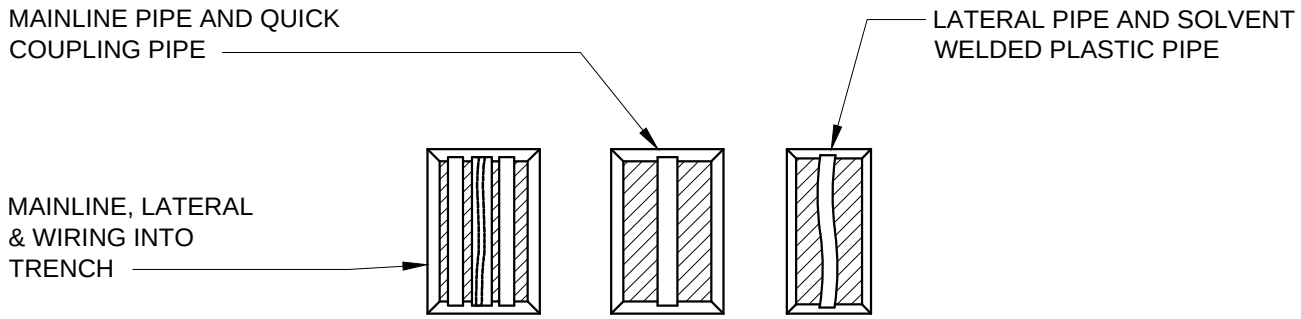

PLAN VIEW

NOTES:

1. SLEEVE BELOW ALL HARDSCAPE ELEMENTS WITH CLASS 315 PVC TWICE THE DIAMETER OF THE PIPE OR WIRE CONDUIT WITHIN; BURIAL DEPTH FOR SLEEVES BELOW FINISHED GRADE ARE AS FOLLOWS:
   - 42 INCH MINIMUM UNDER THOROUGHFARE AND STREETS
   - 24 INCH MINIMUM UNDER PLANTER AREA
   - 24 INCH MINIMUM UNDER PARKING LOT
   - 18 INCH MINIMUM UNDER SIDEWALK
   - 36 INCH MINIMUM UNDER TRAFFIC CIRCLES (RESIDENTIAL AREAS)
2. ALL SLEEVE BELOW HARDSCAPE SHALL EXTEND 24 INCHES BEYOND HARD SURFACE EDGES.
3. FOR PIPE AND WIRE BURIAL DEPTHS, SEE SPECIFICATIONS, MAINLINE SHALL HAVE MINIMUM COVER OF 24 INCHES, LATERAL SHALL HAVE MINIMUM COVER OF 18 INCHES.
4. SCH 40 PVC FOR MAINLINE 2 INCHES OR SMALLER.
5. CLASS 315 PVC FOR MAINLINE 2 1/2 INCHES AND LARGER.
6. CLASS 200 PVC FOR 2 INCH LATERAL LINES AND SMALLER.
7. SCH 40 PVC FOR QUICK COUPLING LINE 1 INCH MIN. TO 2 INCH MAXIMUM
8. TRENCH BACKFILL SHALL BE NATIVE MATERIAL, COMPACT TO 90% MINIMUM, RELATIVE COMPACTION UNLESS UNDER CONCRETE OR ASPHALT. USE TRENCH BACKFILL PER CITY SPECIFICATION 11A AND 11B UNDER CONCRETE OR ASPHALT.
9. REFER TO DETAIL LSD-14 FOR IRRIGATION MATERIALS LIST.
10. IF APPROVED IN WRITING FROM THE CITY'S LANDSCAPE ARCHITECT, CONTROL WIRE MAY BE INSTALLED WITHOUT CONDUIT. INSTEAD, RUN WIRING BENEATH MAINLINE. TAPE AND BUNDLE AT 10 FOOT INTERVALS. TIE A 24 INCH LOOP IN ALL WIRING AT CHANGES OF DIRECTION OF 30 INCHES OR GREATER. UNTIE AFTER ALL CONNECTIONS HAVE BEEN MADE.

APPR	REVISED	DATE
	Council Revision	12/13/11

REVISIONS

CITY OF FREMONT

STANDARD DETAILS

CITY STANDARD IRRIGATION TRENCH

DATE APPROVED BY CITY COUNCIL 12/13/11

RESOLUTION NO. 2006-31

CITY ENGINEER

FILE NO.	SCALE	DRAWN	CHECKED	DATE	DWG NO.	
LSD-18.DWG	1/4" = 1'-0"	AK/MM/PM	RER	DEC. 2011	LSD-18	1 of 1

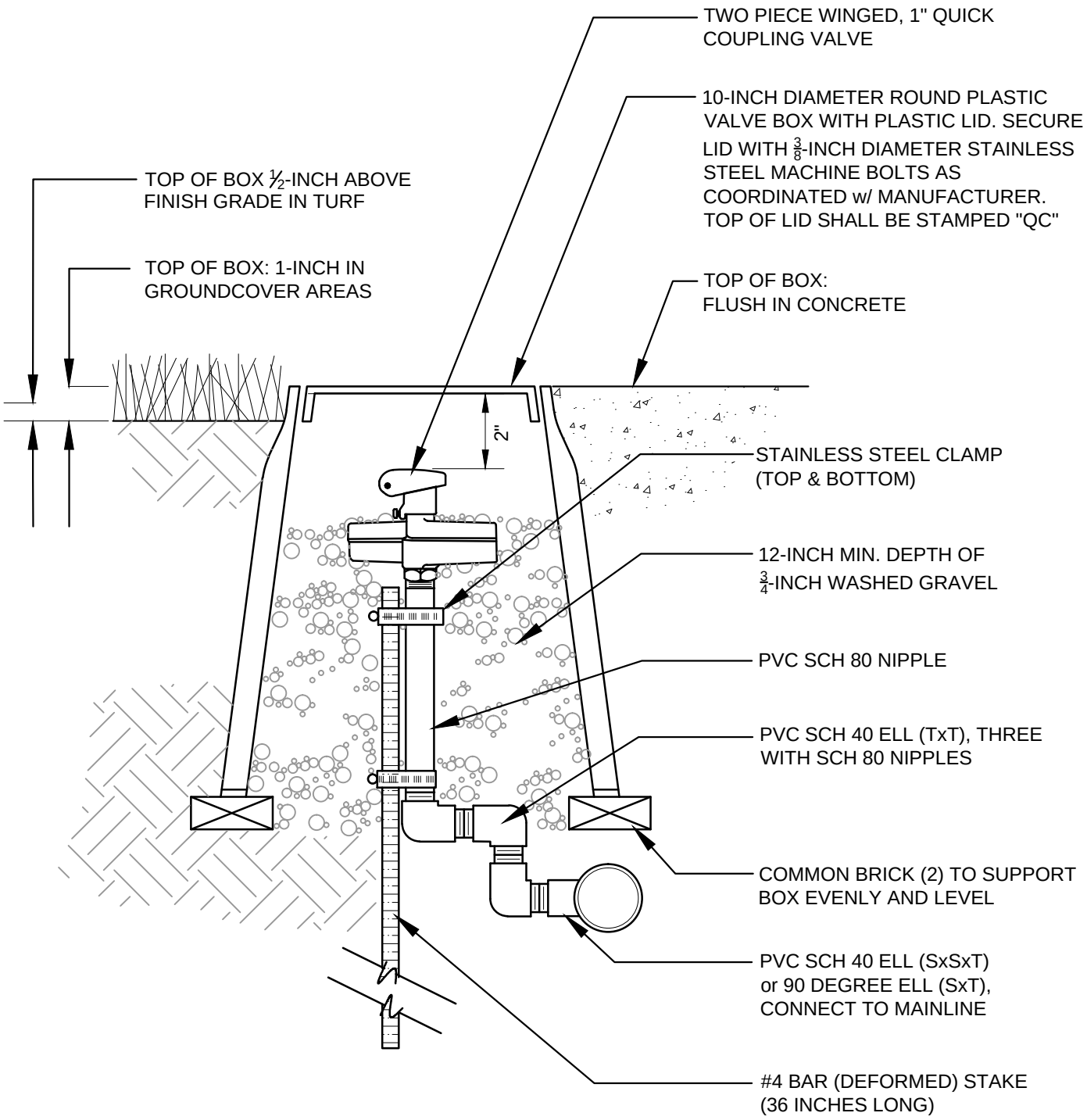

NOTE:

1. CONTRACTOR SHALL PROVIDE:
   (2) VALVE KEYS
   (2) SWIVEL HOSE-ELLS
2. ALL BOXES SHALL BE OFFSET 12-INCHES FROM ANY SIDEWALK, CURB &/or HEADER

APPR	REVISED	DATE
	Council Revision	12/13/11
	General Revision	06/07/10

REVISIONS

CITY OF FREMONT

STANDARD DETAILS

CITY STANDARD IRRIGATION QUICK COUPLING VALVE IN BOX

DATE APPROVED BY CITY COUNCIL 12/13/11

RESOLUTION NO. 2006-31

CITY ENGINEER

FILE NO.	SCALE	DRAWN	CHECKED	DATE	DWG NO.	
LSD-19.DWG	3" = 1'-0"	AK/MM/PM	RER	DEC. 2011	LSD-19	1 of 1

STEP 1: STRIP WIRES ½ INCH FROM ENDS.

STEP 2: APPLY SCOTCHLOK Y SPRING CONNECTOR IN A CLOCKWISE DIRECTION.

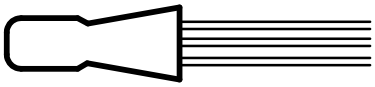

STEP 3: INSERT SPLICE FILLED TO BOTTOM OF GEL-FILLED TUBE, CHECK TO MAKE SURE CONNECTOR HAS BEEN PUSHED PAST LOCKING FINGERS AND IS SEATED AT BOTTOM OF TUBE.

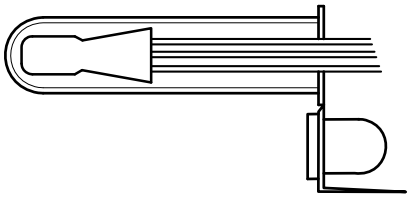

STEP 4: POSITION WIRES IN WIRE CHANNELS AND CLOSE INSULATOR TUBE COVER.

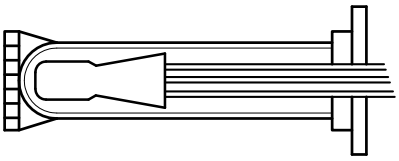

NOTE:
1. MAXIMUM WIRE SIZES PER CONNECTOR ARE 3-#14'S OR 2-#12'S
2. REFER TO CITY STANDARD DETAIL LSD-14 FOR MATERIALS

APPR	REVISED	DATE

REVISIONS

CITY OF FREMONT
STANDARD DETAILS

CITY STANDARD
IRRIGATION WIRE SPLICE

DATE APPROVED BY CITY COUNCIL 12/13/11

RESOLUTION NO. 2006-31

CITY ENGINEER

FILE NO.	SCALE	DRAWN	CHECKED	DATE	DWG NO.	
LSD-20.DWG	NONE	AK/MM/PM	RER	NOV. 2005	LSD-20	1 of 1

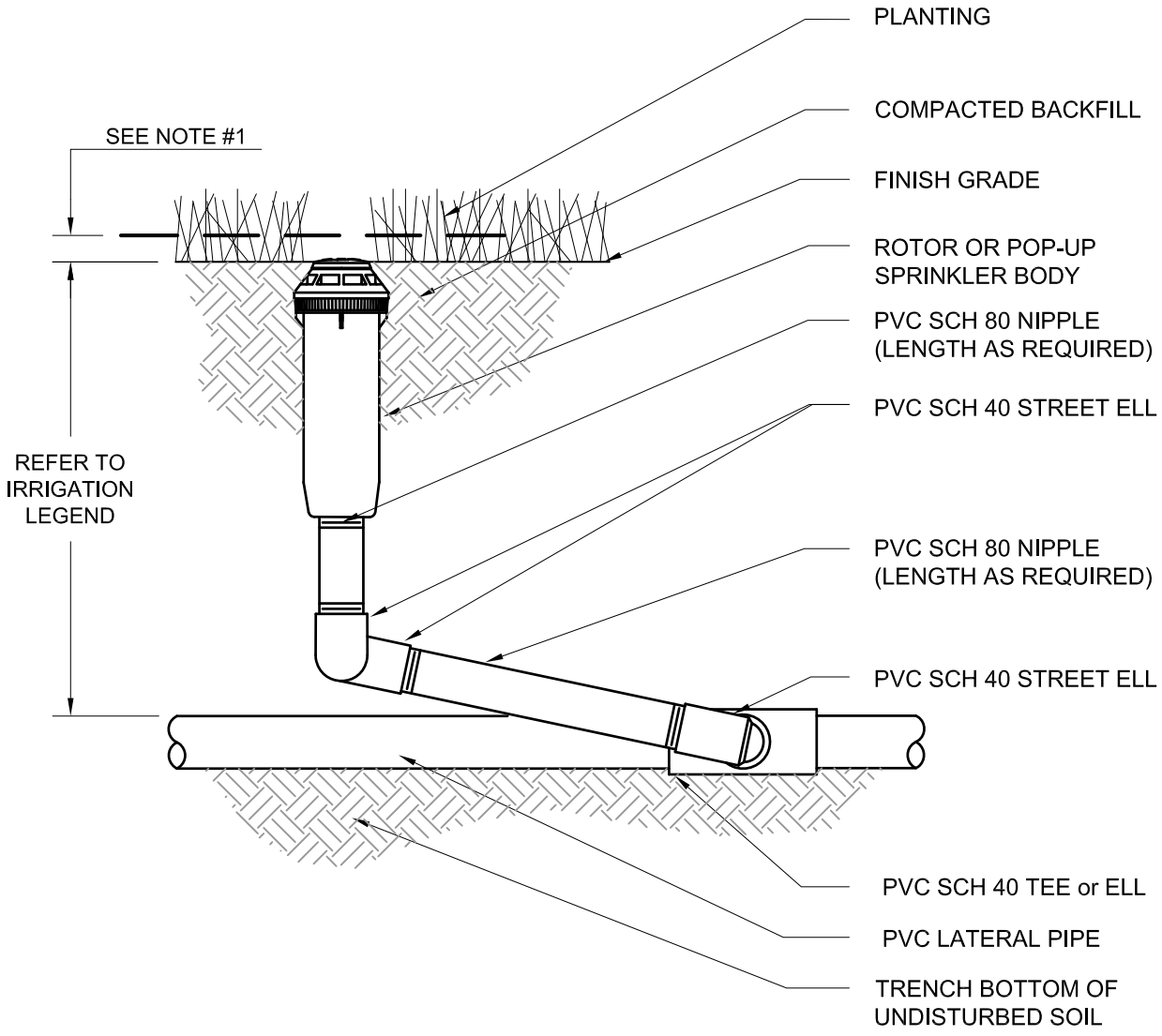

NOTE:

1. INSTALL TOP OF POP-UP SPRINKLER 1 INCH ABOVE FINISHED GRADE IN SHRUB AREAS AND FLUSH WITH GRADE IN TURF AREAS.
2. ROTORS SHALL BE INSTALLED FLUSH IN TURF AREAS.
3. REFER TO CITY STANDARD DETAIL LSD-14 FOR MATERIALS
4. INSTALL A MINIMUM OF 9" FROM EDGE OF PAVEMENT IN SHRUB AREAS AND 2" IN TURF AREAS.

APPR	REVISED	DATE

REVISIONS

CITY OF FREMONT
STANDARD DETAILS

CITY STANDARD
IRRIGATION ROTOR OR POP-UP

DATE APPROVED BY CITY COUNCIL 12/13/11

RESOLUTION NO. 2006-31

CITY ENGINEER

FILE NO.	SCALE	DRAWN	CHECKED	DATE	DWG NO.	
LSD-21.DWG	NONE	AK/MM/PM	RER	NOV. 2005	LSD-21	1 of 1

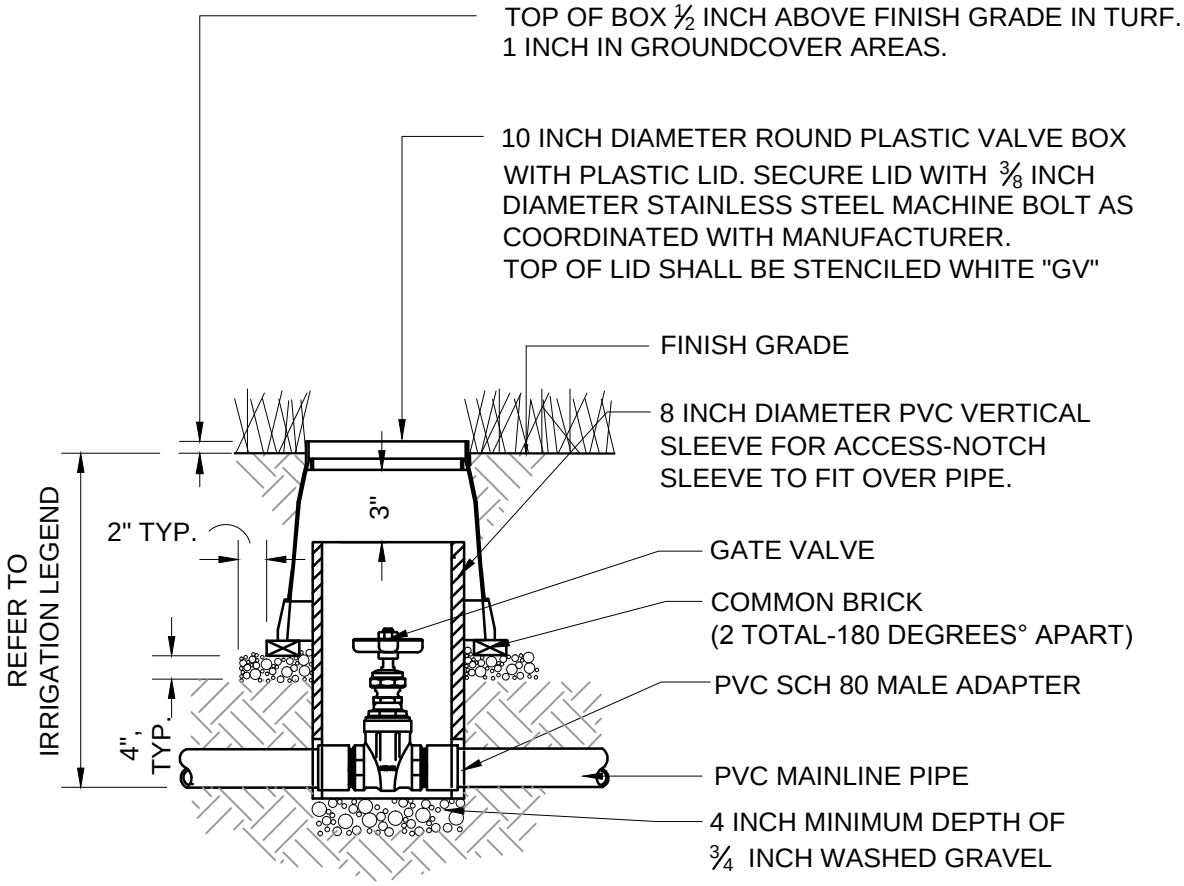

NOTE:
1. REFER TO CITY STANDARD DETAIL LSD-14 FOR ALL MATERIALS

APPR	REVISED	DATE

REVISIONS

CITY OF FREMONT
STANDARD DETAILS

CITY STANDARD
IRRIGATION GATE VALVE

DATE APPROVED BY CITY COUNCIL 04/11/06

RESOLUTION NO. 2006-31

CITY ENGINEER

FILE NO.	SCALE	DRAWN	CHECKED	DATE	DWG NO.	
LSD-22.DWG	1-1/2" = 1'-0"	AK/MM/PM	RER	NOV. 2005	LSD-22	1 of 1

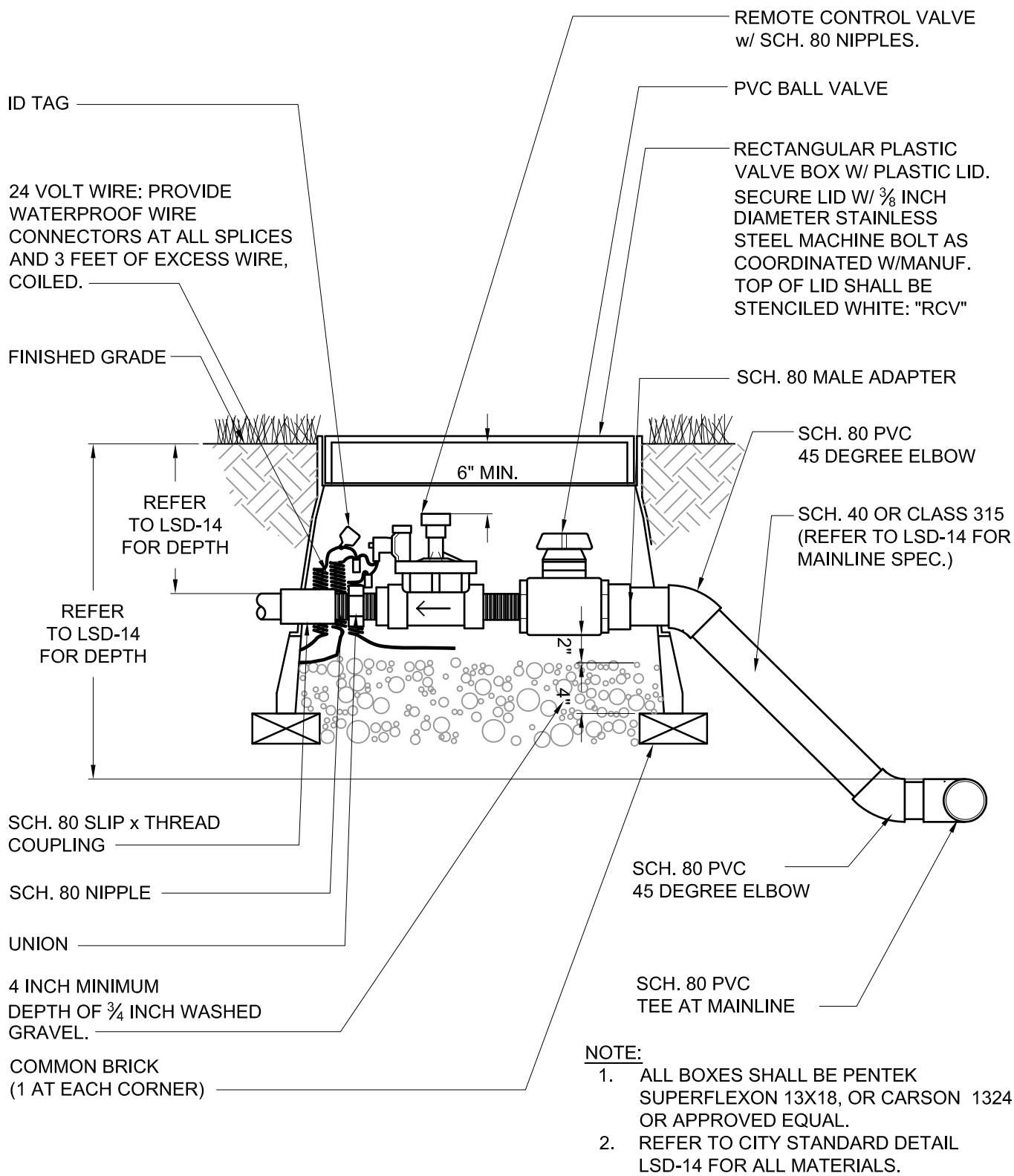

NOTE:

1. ALL BOXES SHALL BE PENTEK SUPERFLEXON 13X18, OR CARSON 1324 OR APPROVED EQUAL.
2. REFER TO CITY STANDARD DETAIL LSD-14 FOR ALL MATERIALS.

APPR	REVISED	DATE

REVISIONS

CITY OF FREMONT

STANDARD DETAILS

CITY STANDARD

IRRIGATION REMOTE CONTROL VALVE W/ GATE VALVE

DATE APPROVED BY CITY COUNCIL 12/13/11

RESOLUTION NO. 2006-31

CITY ENGINEER

FILE NO.	SCALE	DRAWN	CHECKED	DATE	DWG NO.	
LSD-23.DWG	1" = 1'-0"	AK/MM/PM	RER	NOV. 2005	LSD-23	1 of 1

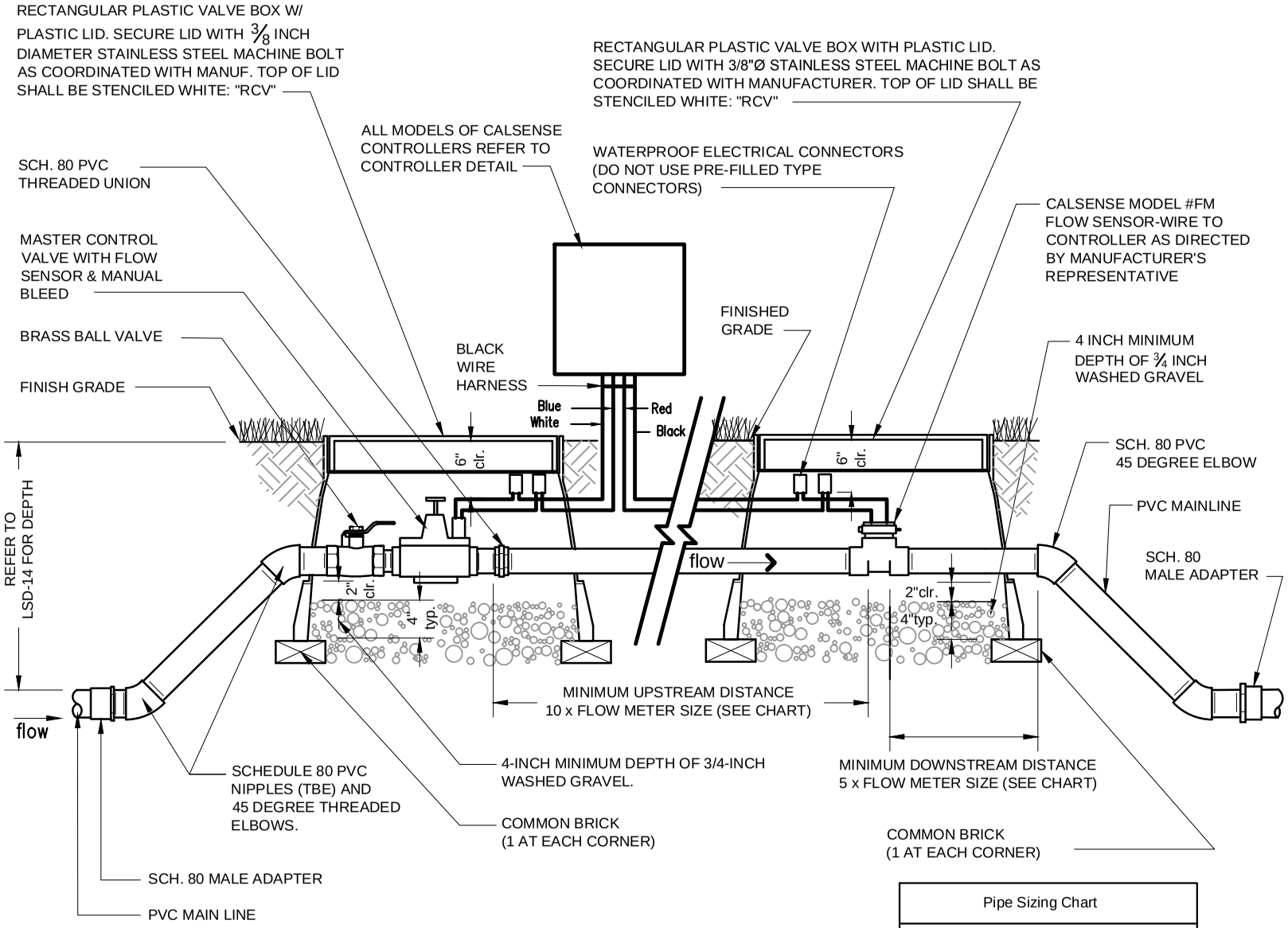

NOTES:

1. DISTANCE BETWEEN MASTER CONTROL VALVE AND FLOW SENSOR, FLOW SENSOR AND FIRST DOWNSTREAM ELBOW SHALL BE PER MANUFACTURER'S RECOMMENDATIONS
2. ALL BOXES SHALL BE CARSON 1324 OR APPROVED EQUAL.
3. REFER TO CITY STANDARD DETAIL LSD-14 FOR ALL MATERIALS

Pipe Sizing Chart

Flow Meter Size	Upstream Length	Downstream Length
1"	10"	5"
1.25"	12.5"	6.25"
1.5	15"	7.5"
2"	20"	10"
3"	30"	15"

CITY OF FREMONT

STANDARD DETAILS

CITY STANDARD

IRRIGATION MASTER VALVE AND FLOW SENSOR

APPR	REVISED	DATE

REVISIONS

DATE APPROVED BY CITY COUNCIL 04/11/06

RESOLUTION NO. 2006-31

CITY ENGINEER

FILE NO.	SCALE	DRAWN	CHECKED	DATE	DWG NO.
LSD-24.DWG	3/4" = 1'-0"	AK/MM	RER	NOV. 2005	LSD-24

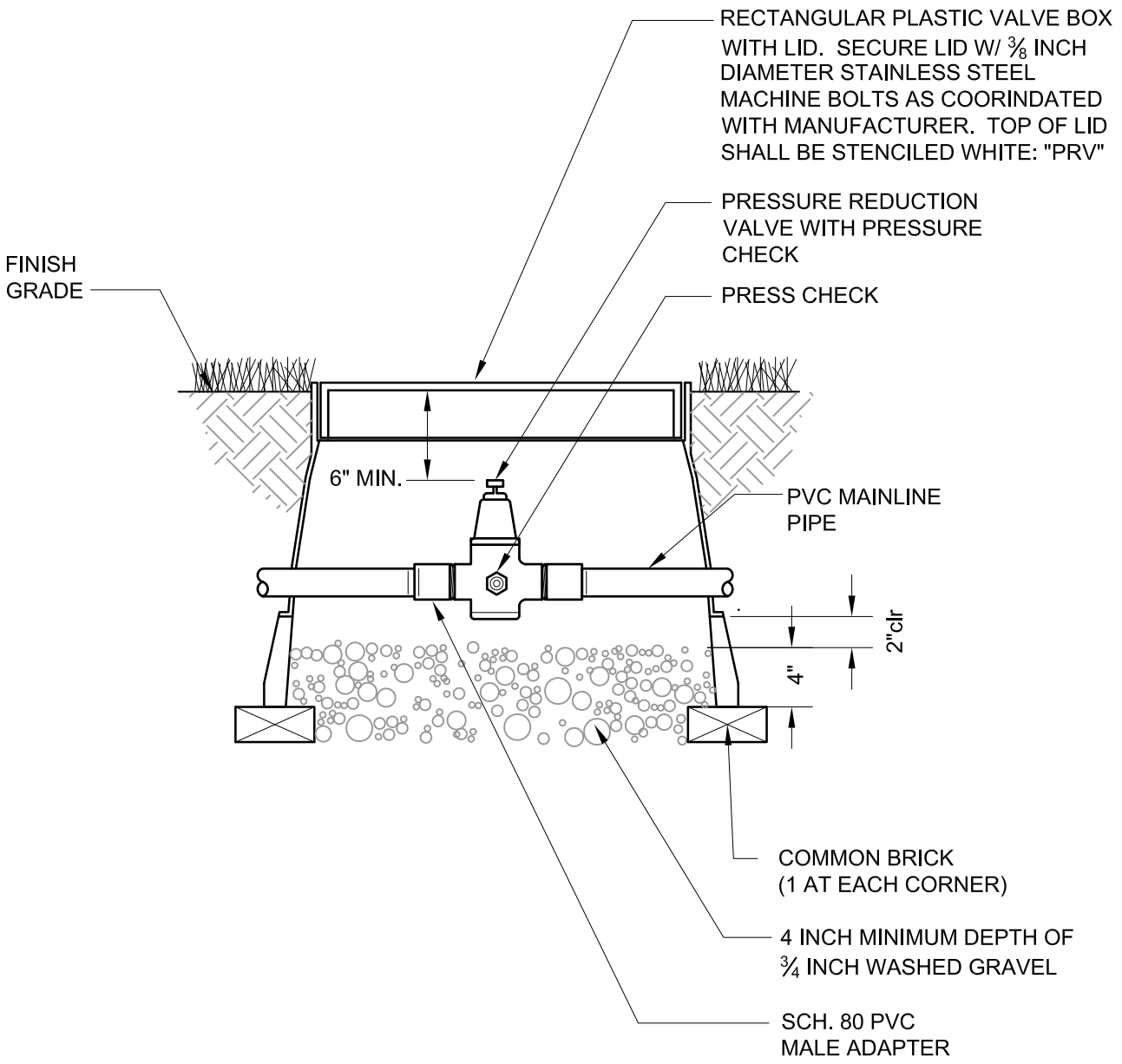

NOTES:

1. PRESSURE REDUCING VALVE BODY SHALL BE IRON; SEAT SHALL BE STAINLESS STEEL; INTEGRAL STRAINER SHALL BE STAINLESS STEEL; STEM SHALL BE BRASS; AND, DISK SHALL BE BRASS.
2. ALL BOXES SHALL BE PENTEK SUPERFLEXON 13X18, CARSON 1324 OR APPROVED EQUAL.
3. REFER TO CITY STANDARD DETAIL LSD-14 FOR ALL MATERIALS

APPR	REVISED	DATE

REVISIONS

CITY OF FREMONT

STANDARD DETAILS

CITY STANDARD

IRRIGATION PRESSURE REDUCTION VALVE

DATE APPROVED BY CITY COUNCIL 12/13/11

RESOLUTION NO. 2006-31

CITY ENGINEER

FILE NO.	SCALE	DRAWN	CHECKED	DATE	DWG NO.	
LSD-25.DWG	1" = 1'-0"	AK/MM/PM	RER	NOV. 2005	LSD-25	1 of 1

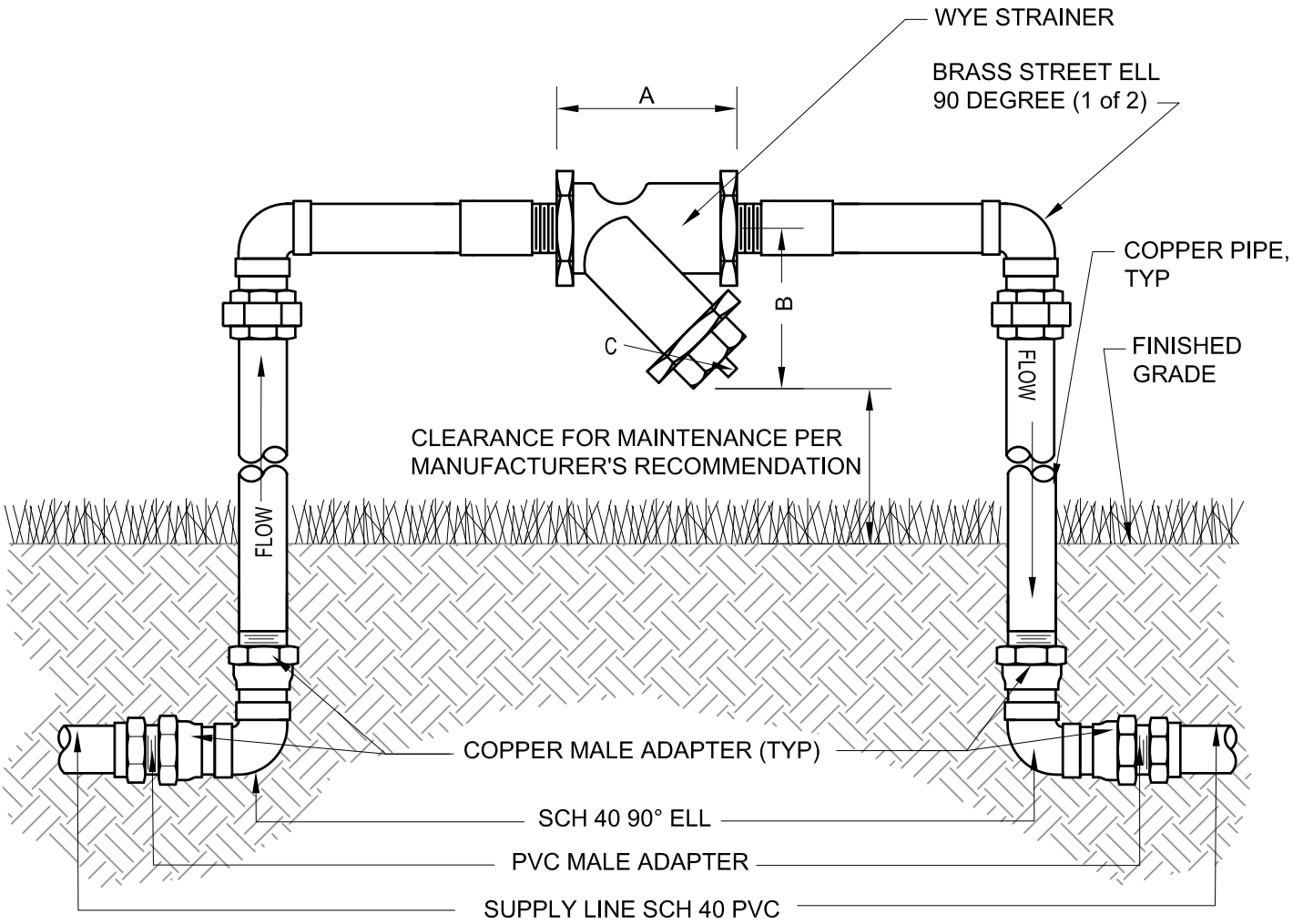

Size	½"	¾"	1"	1¼"	1½"	2"
A	2¾"	3"	3¾"	4 7/16"	4 15/16"	6⅛"
B	2¼"	2 9/16"	2¾"	3⅝"	3⅞"	5⅛"
C	¼"	⅜"	⅜"	¾"	¾"	1"
Wt	.75	1.38	2.13	3.13	4.5	7

NOTES:

1. BODY AND CAP SHALL BE BRONZE ASTM B62; SCREEN SHALL BE 20 MESH STAINLESS STEEL; GASKET SHALL BE NON-ASBESTOS; ENDS SHALL BE THREADED ANSI/ASME B1.20.1
2. WORKING PRESSURE SHALL BE NON-SHOCK, 200 PSI @ 150 DEGREES
3. REFER TO CITY STANDARD DETAIL LSD-14 FOR ALL MATERIALS

APPR	REVISED	DATE

REVISIONS

CITY OF FREMONT
STANDARD DETAILS

CITY STANDARD
IRRIGATION WYE STRAINER

DATE APPROVED BY CITY COUNCIL 12/13/11

RESOLUTION NO. 2006-31

CITY ENGINEER

FILE NO.	SCALE	DRAWN	CHECKED	DATE	DWG NO.	
LSD-26.DWG	1" = 1'-0"	AK/MM/PM	RER	NOV. 2005	LSD-26	1 of 1

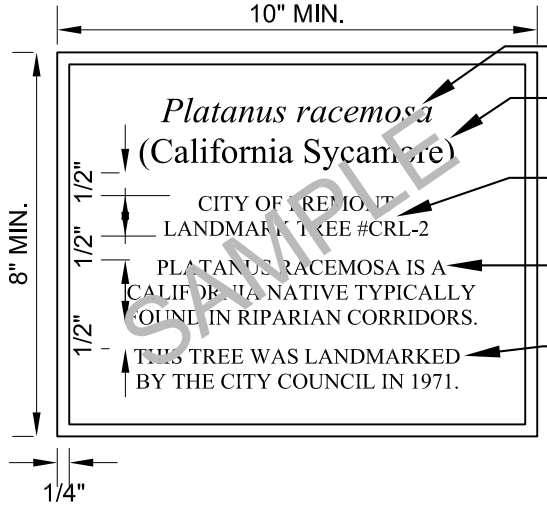

SCIENTIFIC NAME OF TREE, ½" LETTERS, ITALICIZED

COMMON NAME OF TREE IN PARENTHESES, ½" LETTERS

CITY OF FREMONT LANDMARK TREE NUMBER, 5/16" LETTERS, CAPITALIZED

TREE DESCRIPTION, 5/16" LETTERS, CAPITALIZED. DESCRIPTION TO BE APPROVED BY CITY LANDSCAPE ARCHITECT

STANDARD TEXT, 5/16" LETTERS, CAPITALIZED

NOTES:

1. ALL TEXT TO BE TIMES NEW ROMAN, CENTERED ON PLAQUE.
2. BACKGROUND COLOR SHALL BE DARK OXIDE (DARK BROWN).
3. BACKGROUND TEXTURE SHALL BE LEATHERETTE.
4. BORDER SHALL BE SINGLE LINE WITH NO BEVEL.
5. LETTER AND WORD SPACING AS SHOWN.
6. SIZE OF PLAQUE MAY VARY ACCORDING TO VARYING WIDTH OF SPECIES NAME.
7. ANY DEVIATIONS SHALL BE APPROVED BY THE CITY LANDSCAPE ARCHITECT PRIOR TO FABRICATION.

BRONZE PLAQUE
SCALE: 3"=1'-0"

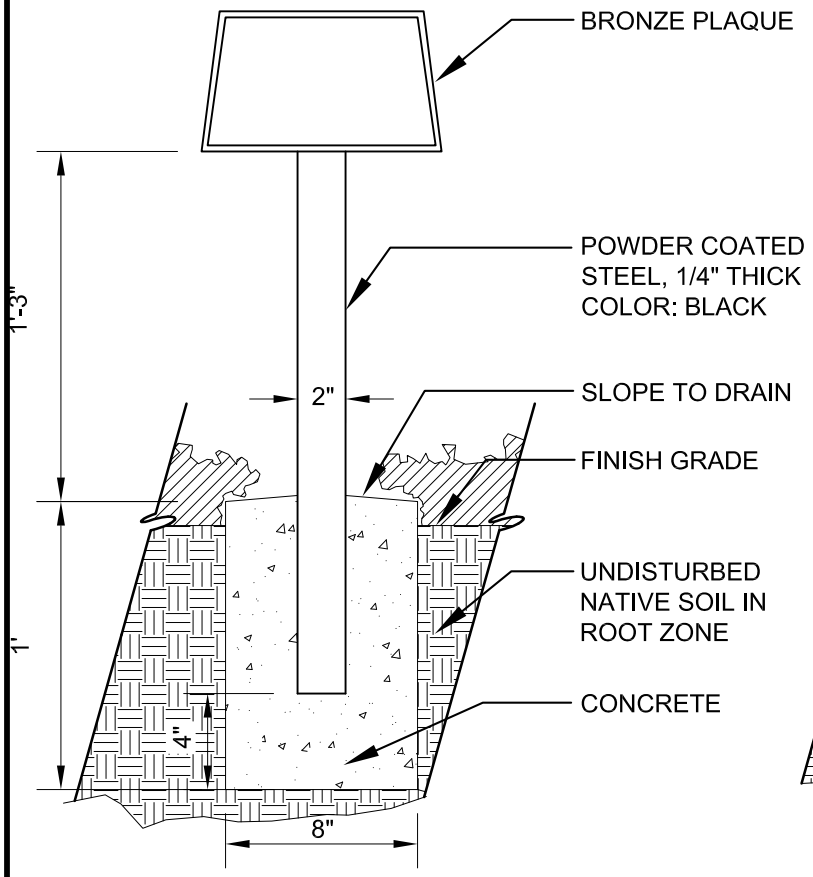

FRONT VIEW
SCALE: 1½"=1'-0"

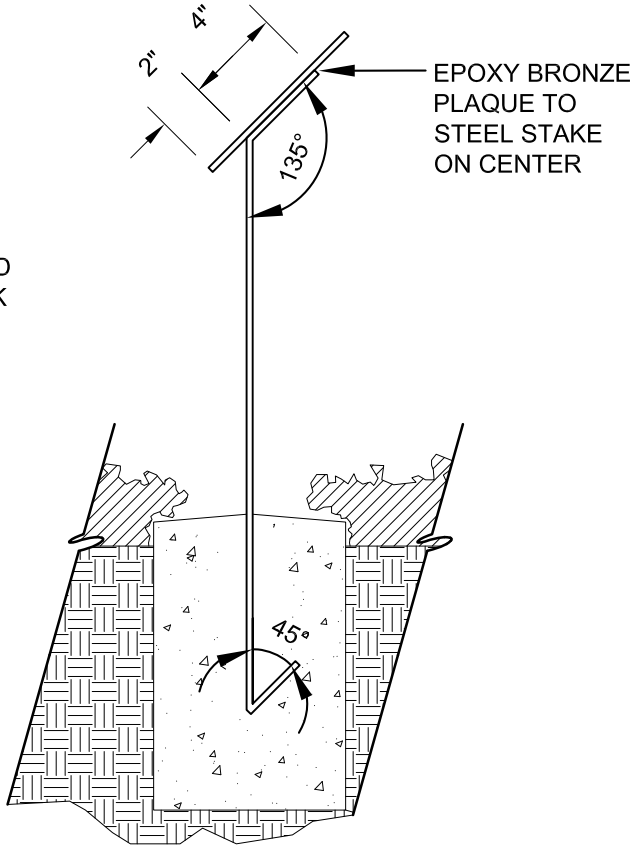

SIDE VIEW
SCALE: 1½"=1'-0"

APPR	REVISED	DATE
	Council Revision	12/13/11

REVISIONS

CITY OF FREMONT
STANDARD DETAILS
CITY STANDARD LANDMARK TREE PLAQUE

DATE APPROVED BY CITY COUNCIL 12/13/11

RESOLUTION NO. 2006-31

CITY ENGINEER

FILE NO.	SCALE	DRAWN	CHECKED	DATE	DWG NO.	
LSD-27.DWG	AS SHOWN	TB	RER	DEC. 2011	LSD-27	1 OF 1

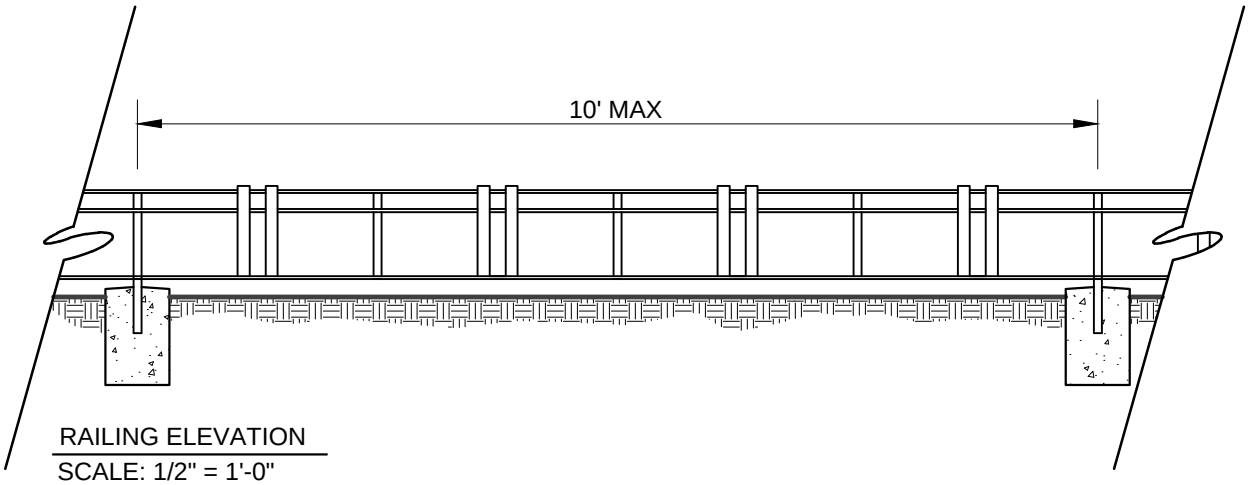

RAILING ELEVATION
SCALE: 1/2" = 1'-0"

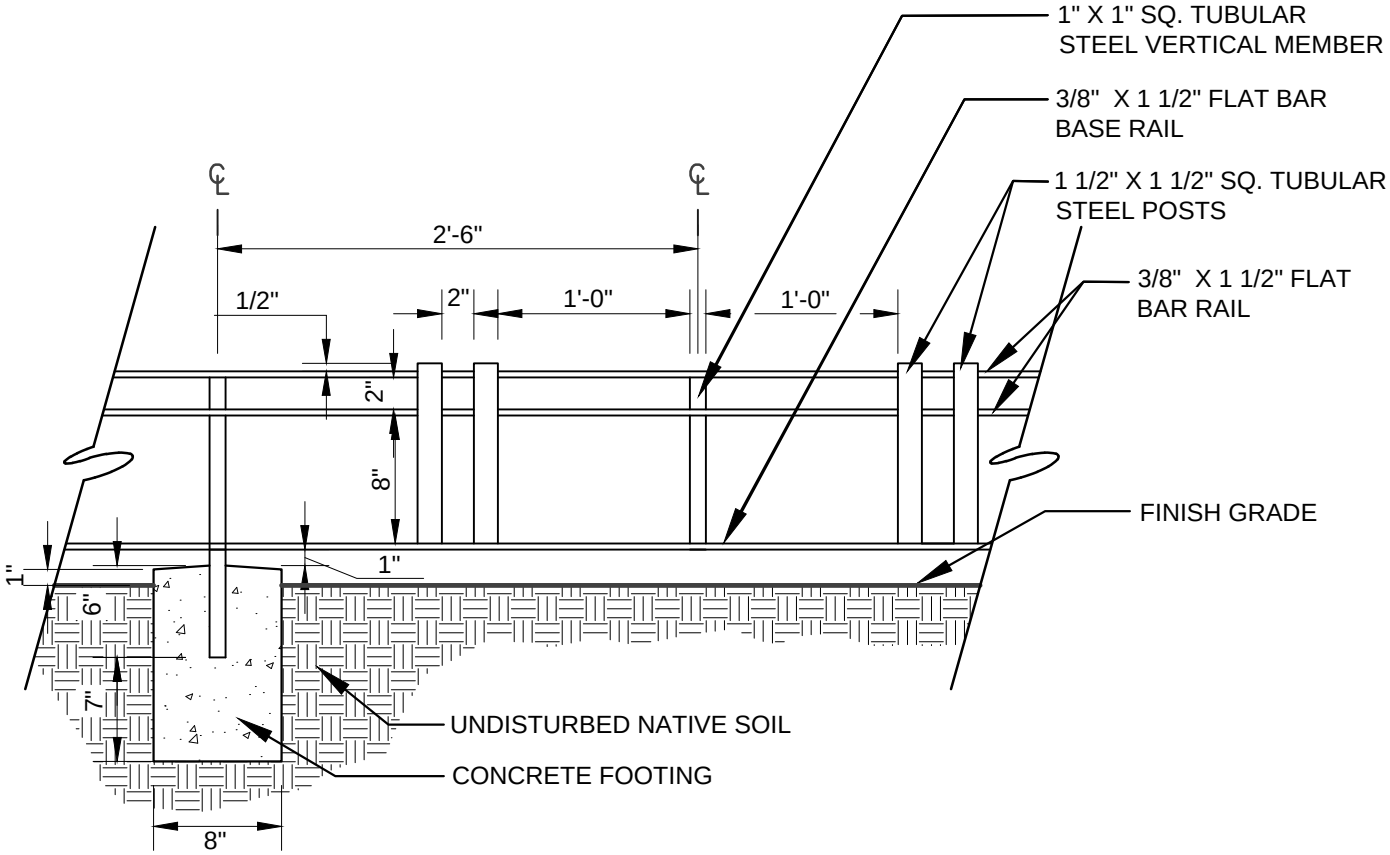

LOW METAL RAILING
SCALE: 1" = 1'-0"

NOTE:
ALL MEMBERS SOLID STEEL RAILING AND TUBULAR STEEL

			CITY OF FREMONT STANDARD DETAILS			DATE APPROVED BY CITY COUNCIL 12/13/11	
						RESOLUTION NO. 2006-31	
	Council Revision	12/13/11	CITY STANDARD LANDMARK TREE RAILING				
APPR	REVISED	DATE				CITY ENGINEER	
REVISIONS							
FILE NO. LSD-28.DWG	SCALE VARIES		DRAWN TB	CHECKED RER	DATE DEC. 2011	DWG NO. LSD - 28	1 of 1

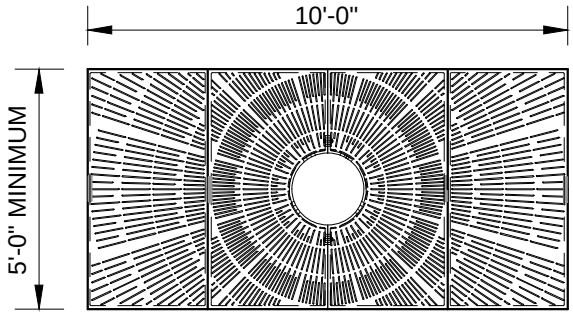

NOTE:
NEENAH TREE GRATE (WITH EXTENSIONS) PER LSD-2 OR APPROVED EQUAL

PLAN VIEW - TREE GRATE

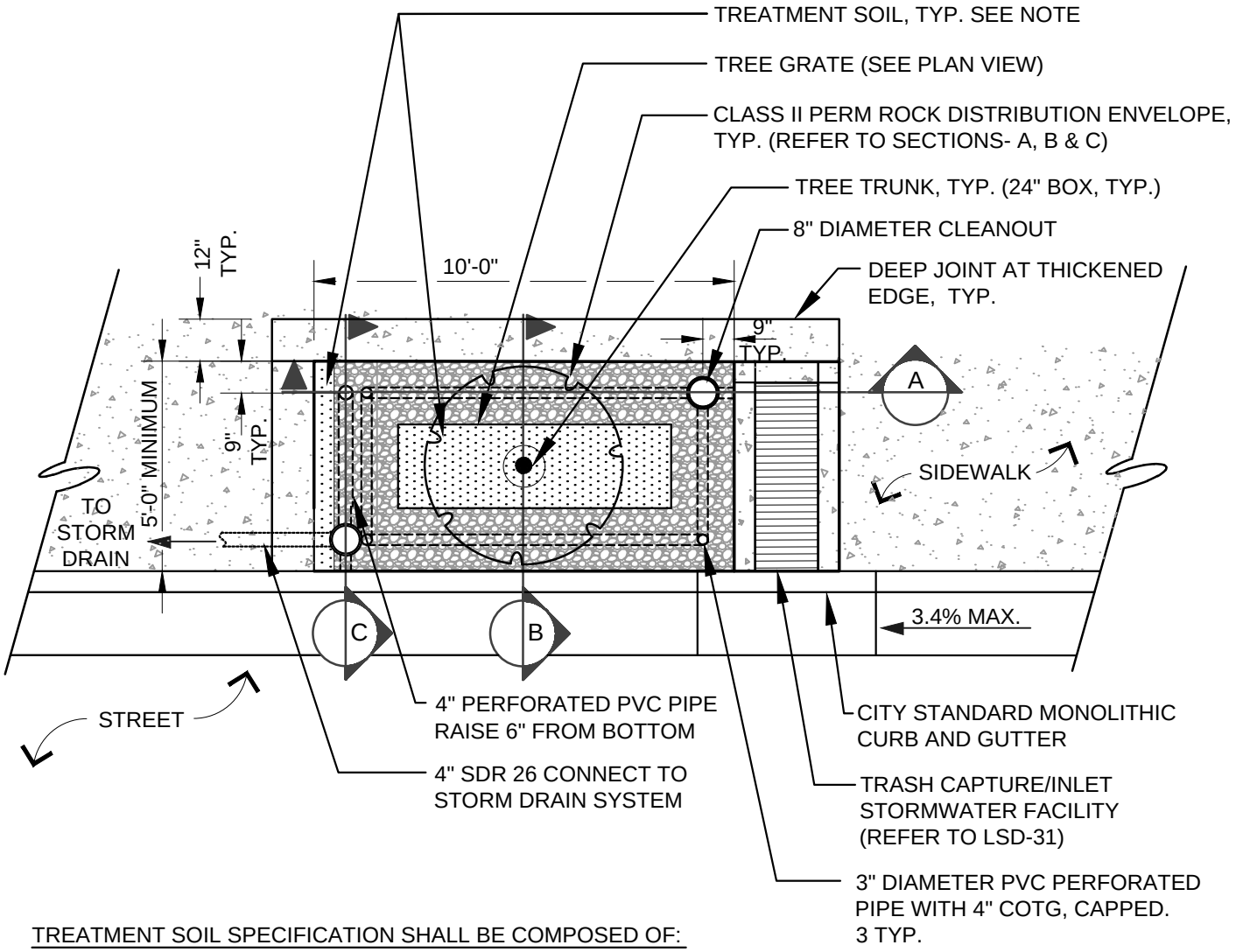

TREATMENT SOIL SPECIFICATION SHALL BE COMPOSED OF:
60% ASTM C-33 SAND
30% USCC STA CERTIFIED COMPOST
10% SMALL WOOD CHIPS

APPR	REVISED	DATE
	Council Revision	12/13/11

REVISIONS

CITY OF FREMONT
STANDARD DETAILS
CITY STANDARD
STORMWATER TREEWELL
PLAN VIEW

DATE APPROVED BY CITY COUNCIL 12/13/11
RESOLUTION NO. 2006-31
CITY ENGINEER

FILE NO.	SCALE	DRAWN	CHECKED	DATE	DWG NO.	
LSD-29.DWG	1/4" = 1'-0"	EL/TB/CC	RER	DEC. 2011	LSD-29	1 OF 2

SIZING INFORMATION:

1. THE MAXIMUM ALLOWABLE DRAINAGE AREA FOR THIS TREEWELL AS SHOWN (10' x 5') SHALL BE 1,250 SQ. FT. TREEWELL HAS BEEN SIZED USING THE COMBINED FLOW AND VOLUME METHODOLOGY AS DETAILED IN THE ACCWP C.3 STORMWATER TECHNICAL MANUAL. ANY DEVIATION FROM THIS SIZE (10' x 5') WOULD REQUIRE FLOW-VOLUME CALCULATIONS. SUBSURFACE TREEWELL TREATMENT DEVICES WILL NOT BE ACCEPTED USING SIMPLIFIED SIZING CRITERIA OF 4%.
2. THE CURB INLET OPENING OF 15" AS SHOWN IS SUFFICIENT TO CAPTURE 100% OF THE TREATMENT RUNOFF FROM THE MAXIMUM DRAINAGE AREA (1,250 SQ.FT. OF IMPERVIOUS AREA) PERTINENT TO THIS TREEWELL SIZE. THE LENGTH OF CURB OPENING REQUIRED FOR 100% CAPTURE IS DEPENDENT ON THE GUTTER SLOPE (FOR TREEWELLS INSTALLED AT GRADE). STREETS GREATER THAN 3.4% SHALL REQUIRE LONGER OR MULTIPLE CURB OPENINGS BASED ON INLET CAPTURE CALCULATIONS.
3. FOR ADDITIONAL PLANTING AND IRRIGATION REFER TO LSD-2 REQUIREMENTS. TREES MUST BE IRRIGATED.

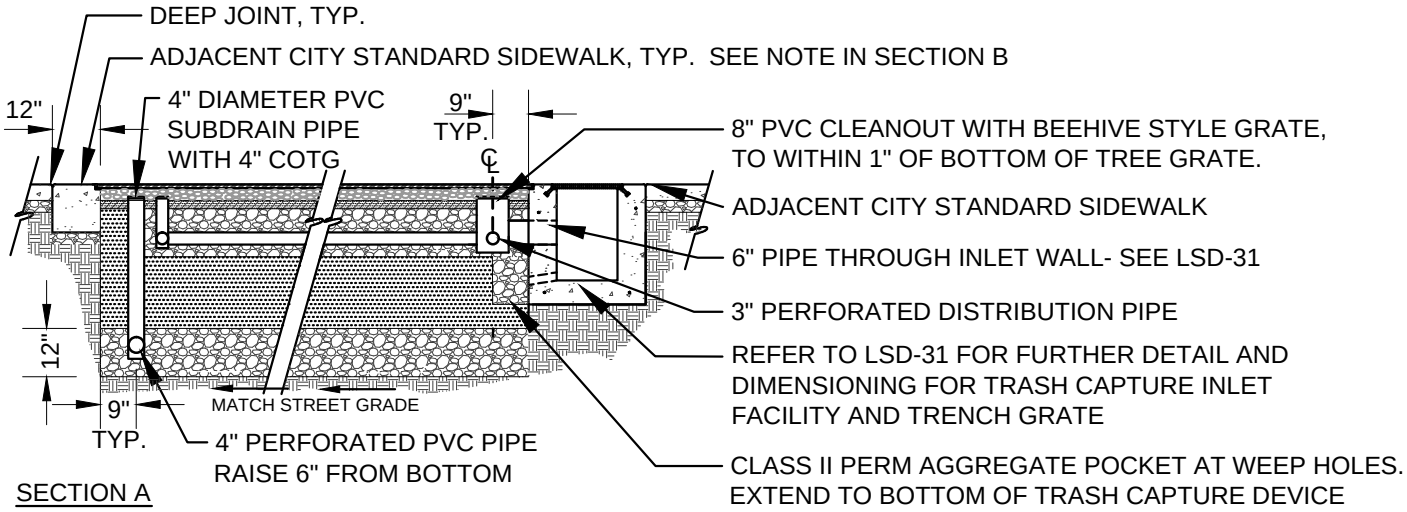

SECTION A

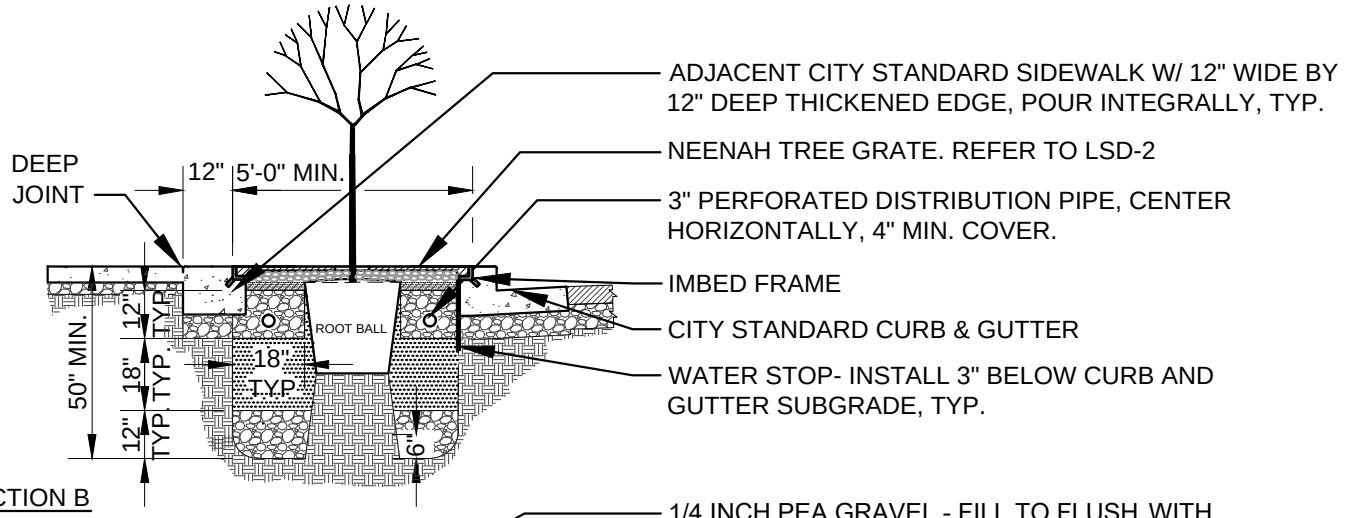

SECTION B

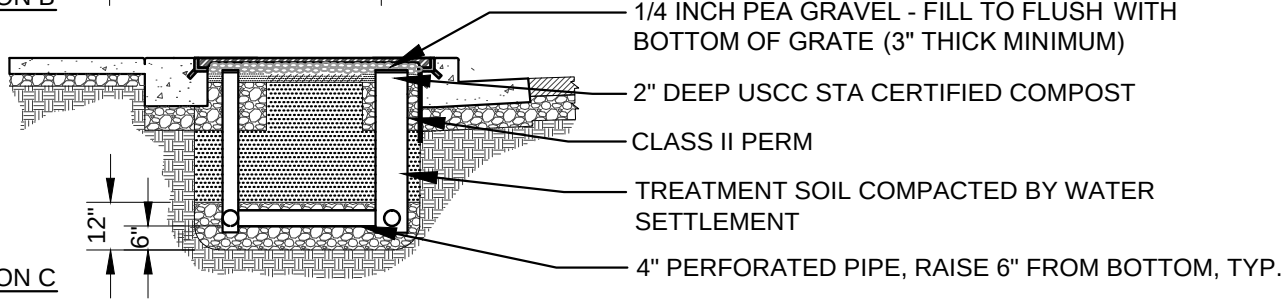

SECTION C

APPR	REVISED	DATE
	Council Revision	12/13/11

REVISIONS

CITY OF FREMONT

STANDARD DETAILS

CITY STANDARD

STORMWATER TREEWELL

SECTIONS

DATE APPROVED BY CITY COUNCIL 12/13/11

RESOLUTION NO. 2006-31

CITY ENGINEER

FILE NO.	SCALE	DRAWN	CHECKED	DATE	DWG NO.	
LSD-29.DWG	1/4=1'-0"	MAM/TB/CC	RER	DEC. 2011	LSD-29	2 OF 2

SIZING INFORMATION:

A. SIZE TREEWELL FILTER TO EQUAL 4% OF THE DRAINAGE AREA ENTERING PLANTER. REFER TO ACCWP C.3 STORMWATER TECHNICAL MANUAL.

B. FOR ADDITIONAL PLANTING AND IRRIGATION REFER TO LSD-2 REQUIREMENTS. TREES MUST BE IRRIGATED.

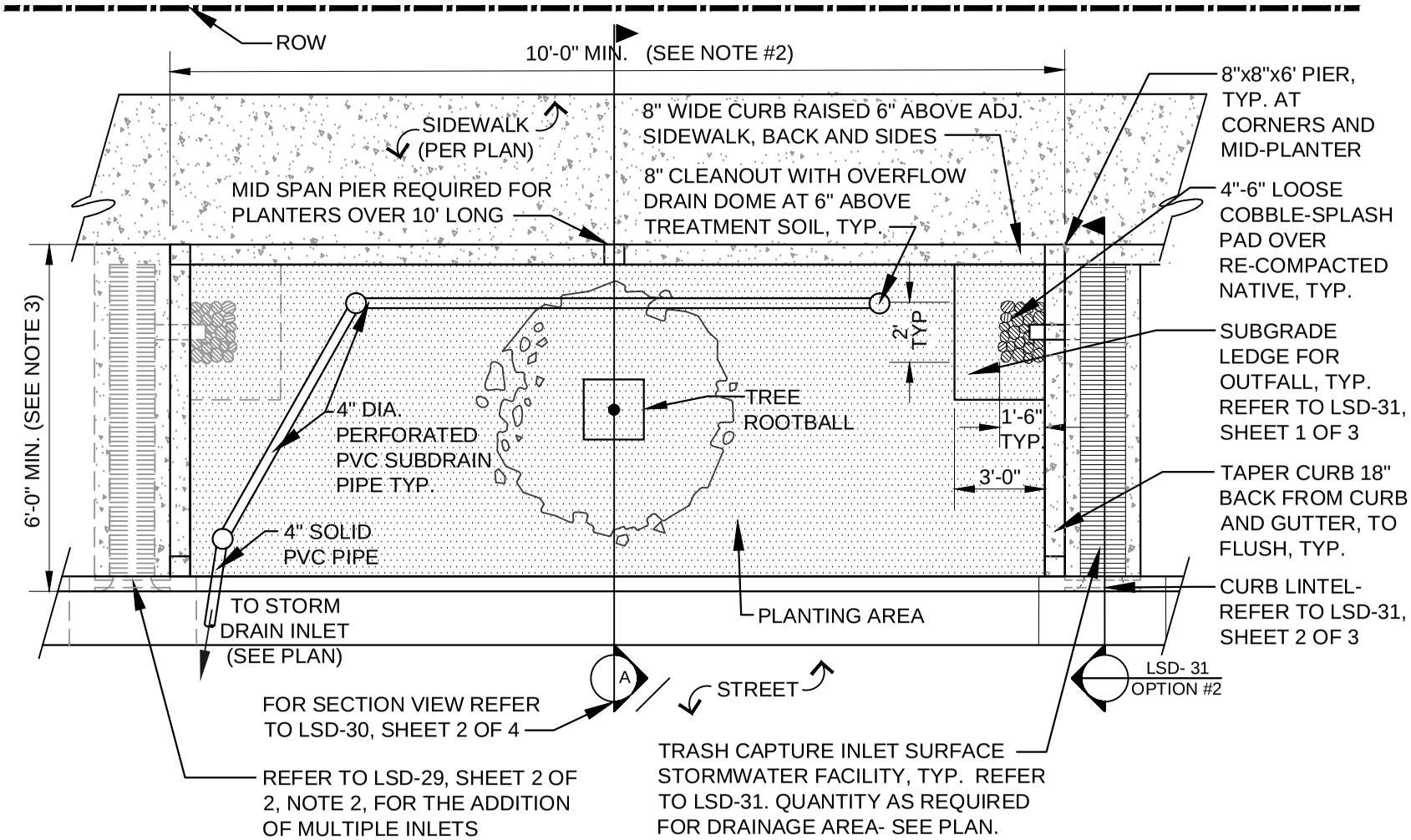

NOTES:

1. USE NDS DOME ATRIUM GRATE FOR OVERFLOW DRAINS, OR APPROVED EQUAL. COLOR: BLACK
2. DIMENSIONS VARY DEPENDING ON SIZE OF DRAINAGE AREA, BUT NOT LESS THAN 5'-0" BY 10'-0"
3. SEE SHEET 3 OF 4 FOR ALTERNATE MONOLITHIC SIDEWALK DESIGN

APPR	REVISED	DATE
	Council Revision	12/13/11

REVISIONS

CITY OF FREMONT

STANDARD DETAILS
CITY STANDARD

STORMWATER PLANTER

PLAN VIEW

DATE APPROVED BY CITY COUNCIL 12/13/11

RESOLUTION NO. 2006-31

CITY ENGINEER

FILE NO.	SCALE	DRAWN	CHECKED	DATE	DWG NO.
LSD-30.DWG	3/16" = 1'-0"	MM	RER	DEC. 2011	LSD-30

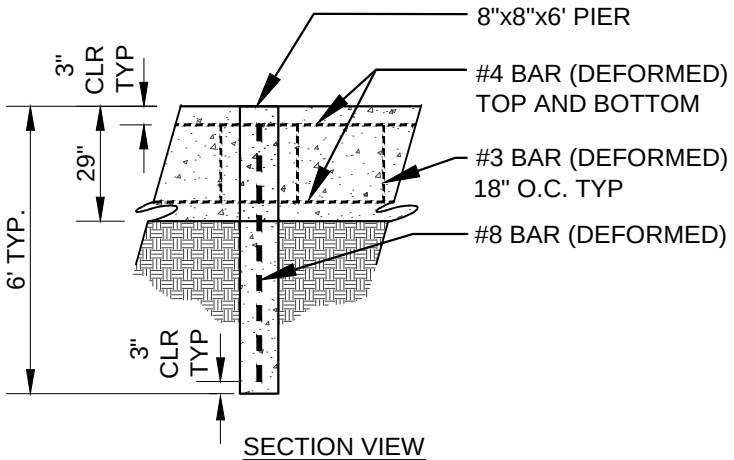

SECTION VIEW
8" SIDE WALLS AND PIER INTERFACE

NOTES:
1. TREATMENT SOIL SHALL BE COMPOSED OF:
   60% ASTM C-33 SAND
   30% USCC STA CERTIFIED COMPOST
   10% SMALL WOOD CHIPS
2. CONTRACTOR MUST SUBMIT TEST RESULTS FROM COMPOST FACILITY.
3. PLANTS MUST BE IRRIGATED.

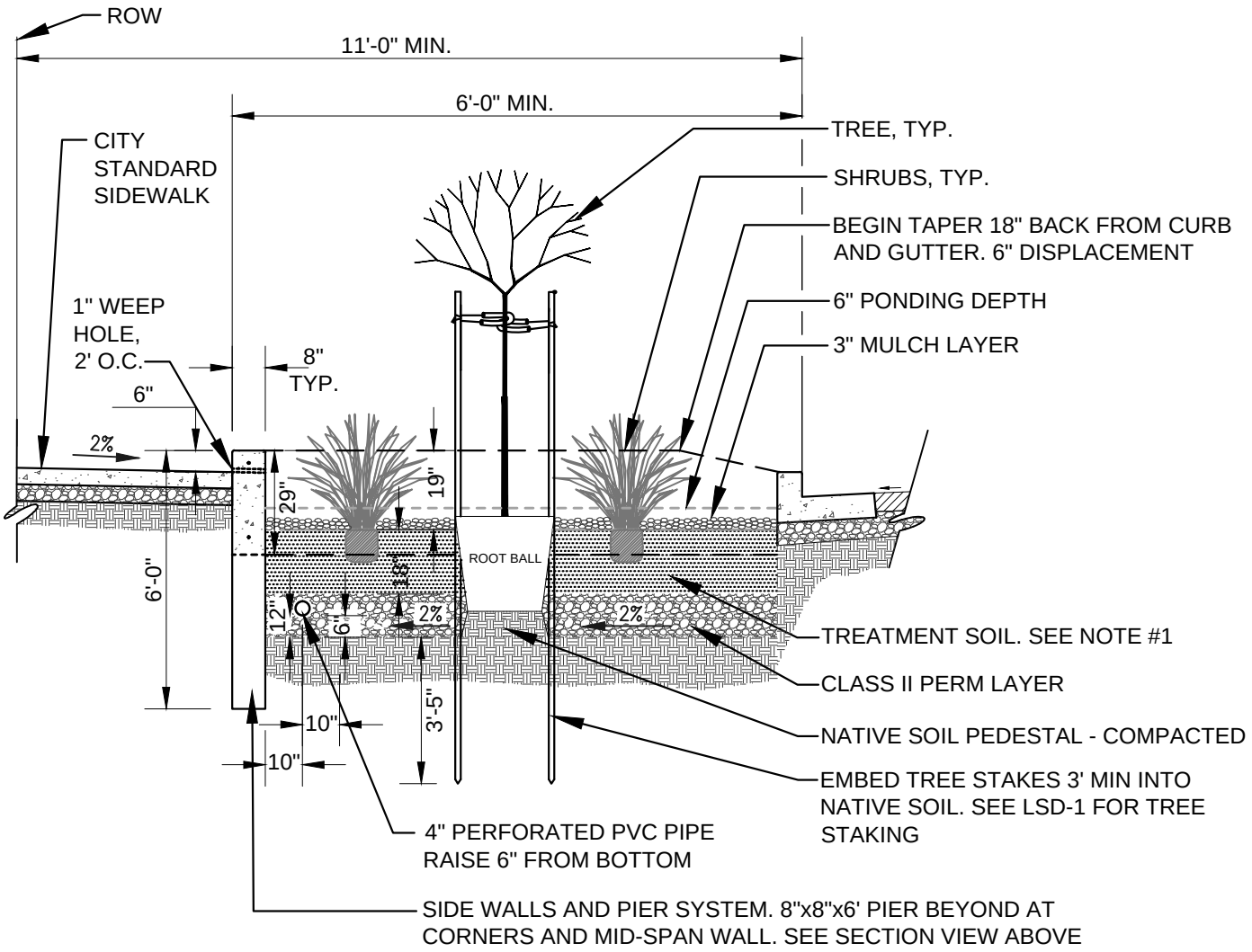

SECTION A

	Council Revision	12/13/11
APPR	REVISED	DATE
REVISIONS		

CITY OF FREMONT
STANDARD DETAILS
CITY STANDARD STORMWATER PLANTER SECTIONS

DATE APPROVED BY CITY COUNCIL 12/13/11
RESOLUTION NO. 2006-31
CITY ENGINEER

FILE NO.	SCALE	DRAWN	CHECKED	DATE	DWG NO.	
LSD-30.DWG	N.T.S.	MM/CC	RER	DEC. 2011	LSD-30	2 OF 4

SIZING INFORMATION:

A. SIZE TREEWELL FILTER TO EQUAL 4% OF THE DRAINAGE AREA ENTERING PLANTER. REFER TO ACCWP C.3 STORMWATER TECHNICAL MANUAL.

B. FOR ADDITIONAL PLANTING AND IRRIGATION REFER TO LSD-2 REQUIREMENTS. TREES MUST BE IRRIGATED.

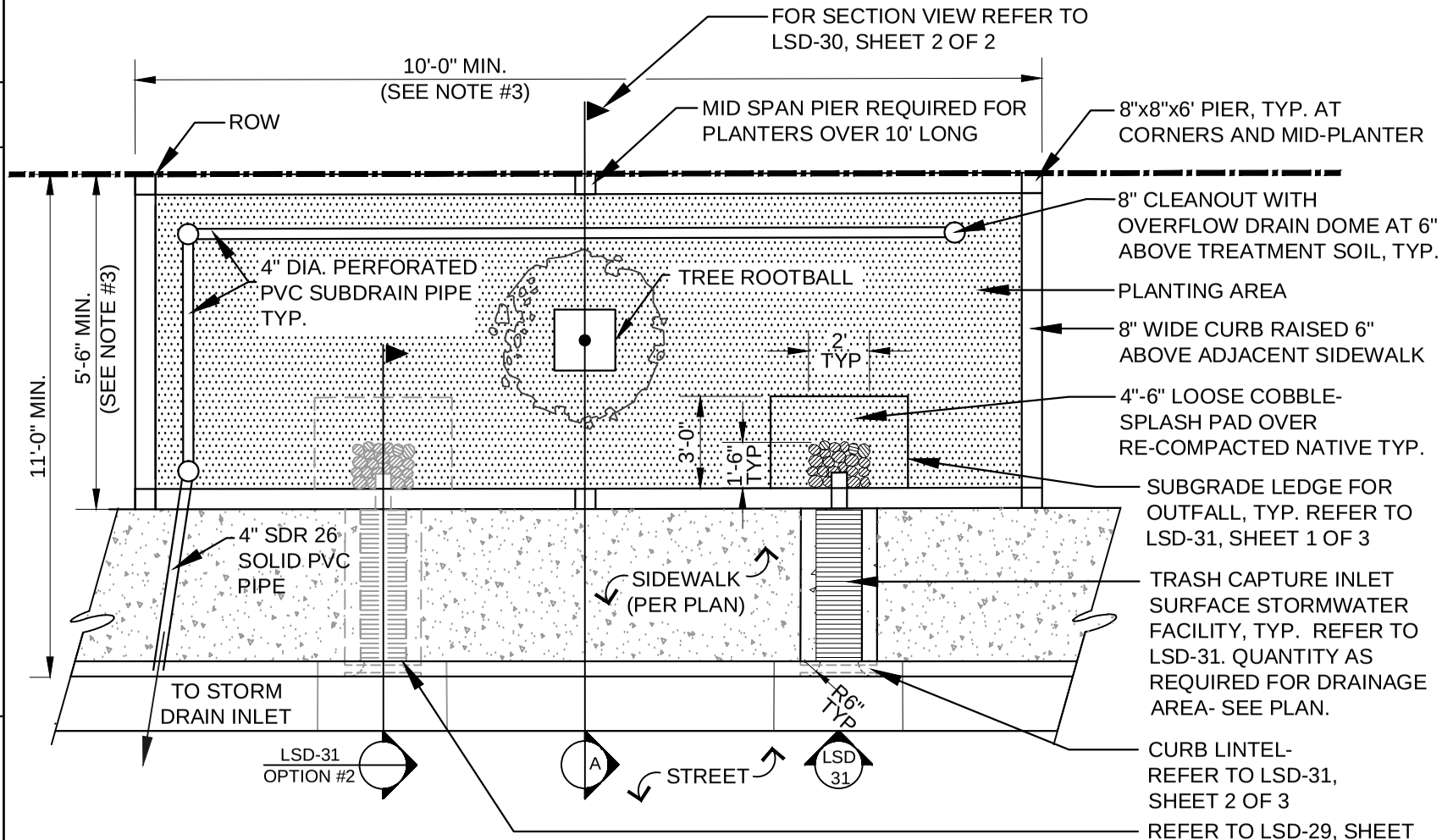

NOTES:

1. USE NDS DOME ATRIUM GRATE FOR OVERFLOW DRAINS, OR APPROVED EQUAL. COLOR: BLACK
2. DIMENSIONS VARY DEPENDING ON SIZE OF DRAINAGE AREA, 5'-0" BY 10'-0" MIN.
3. THIS IS AN ALTERNATE DESIGN FROM THE RESIDENTIAL STANDARD AND IS FOR RETROFIT OR MONOLITHIC SITUATIONS ONLY, AS APPROVED BY THE CITY ENGINEER.

REVISIONS			
	Council Revision	12/13/11	APPR
	REVISED	DATE	

CITY OF FREMONT

STANDARD DETAILS
CITY STANDARD

STORMWATER PLANTER
PLAN VIEW - ALTERNATE

DATE APPROVED BY CITY COUNCIL 12/13/11
RESOLUTION NO. 2006-31
CITY ENGINEER

FILE NO.	SCALE	DRAWN	CHECKED	DATE	DWG NO.
LSD-30.DWG	3/16" = 1'-0"	MM/TB/CC	RER	DEC. 2011	LSD-30

NOTES:

1. TREATMENT SOIL SHALL BE COMPOSED OF:
   - 60% ASTM C-33 SAND
   - 30% USCC STA CERTIFIED COMPOST (SEE NOTE 2)
   - 10% SMALL WOOD CHIPS
2. CONTRACTOR SHALL SUBMIT TEST RESULTS FROM COMPOST FACILITY.
3. PLANTS MUST BE IRRIGATED.
4. THIS IS AN ALTERNATE DESIGN FROM THE RESIDENTIAL STANDARD AND IS FOR RETROFIT OR MONOLITHIC SITUATIONS ONLY, AS APPROVED BY THE CITY ENGINEER.

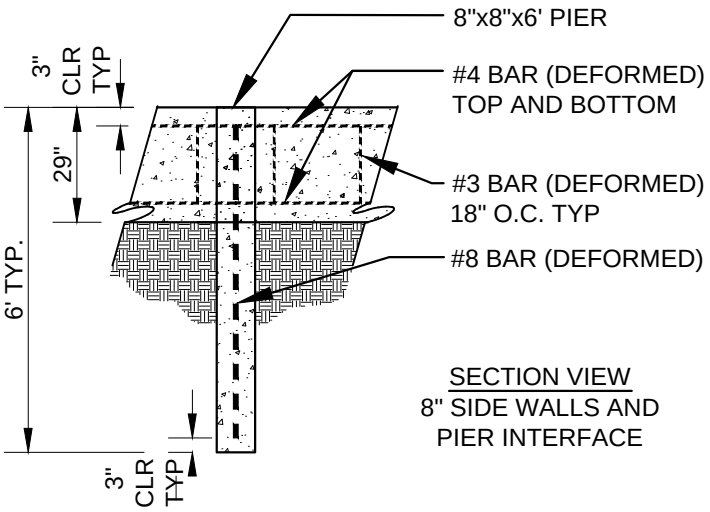

SECTION VIEW
8" SIDE WALLS AND PIER INTERFACE

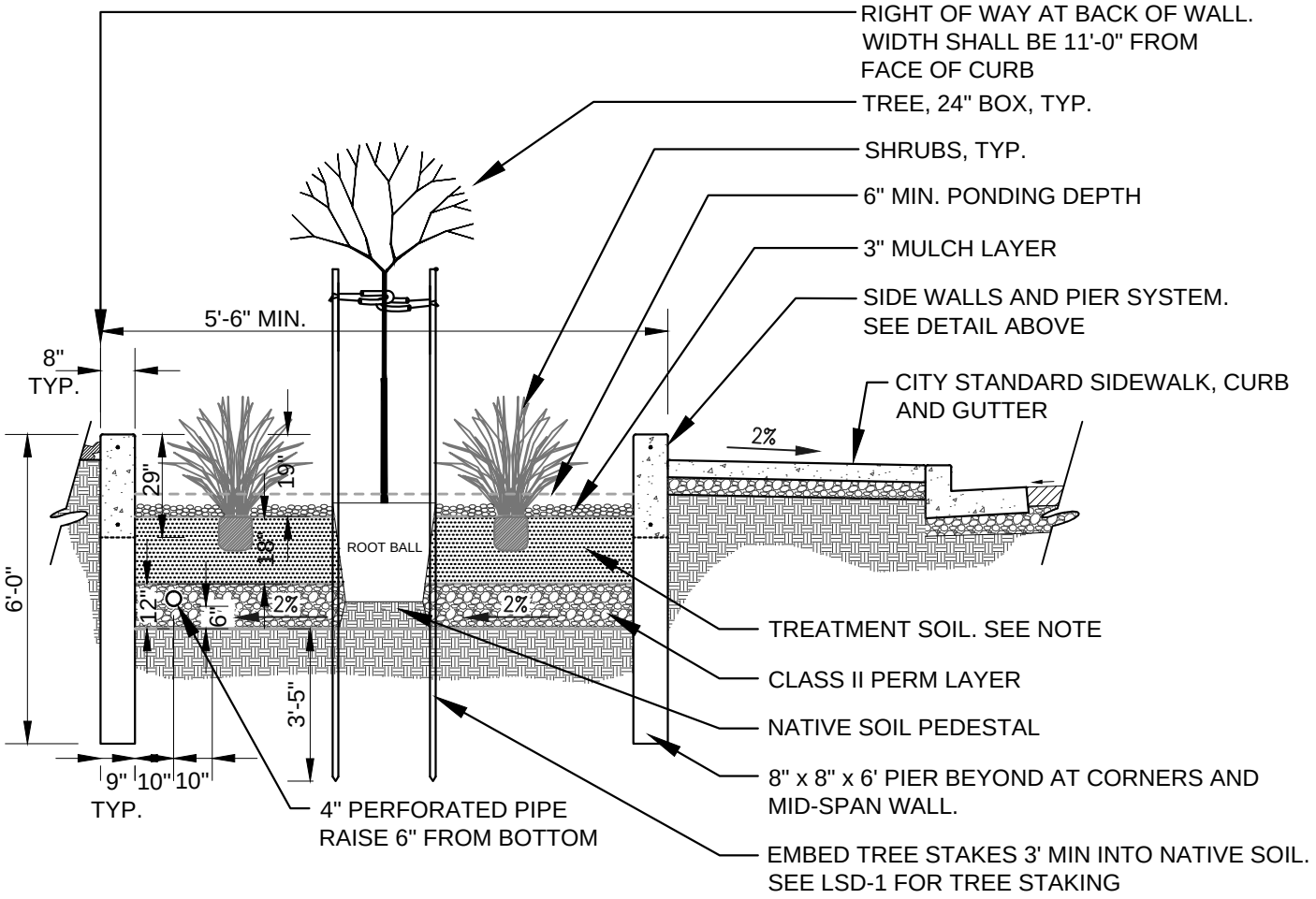

SECTION A

APPR	REVISED	DATE
	Council Revision	12/13/11

REVISIONS

CITY OF FREMONT

STANDARD DETAILS

CITY STANDARD

STORMWATER PLANTER

SECTIONS-ALTERNATE

DATE APPROVED BY CITY COUNCIL 12/13/11

RESOLUTION NO. 2006-31

CITY ENGINEER

FILE NO.	SCALE	DRAWN	CHECKED	DATE	DWG NO.	
LSD-30.DWG	N.T.S.	PN/TB/CC	RER	DEC. 2011	LSD-30	4 OF 4

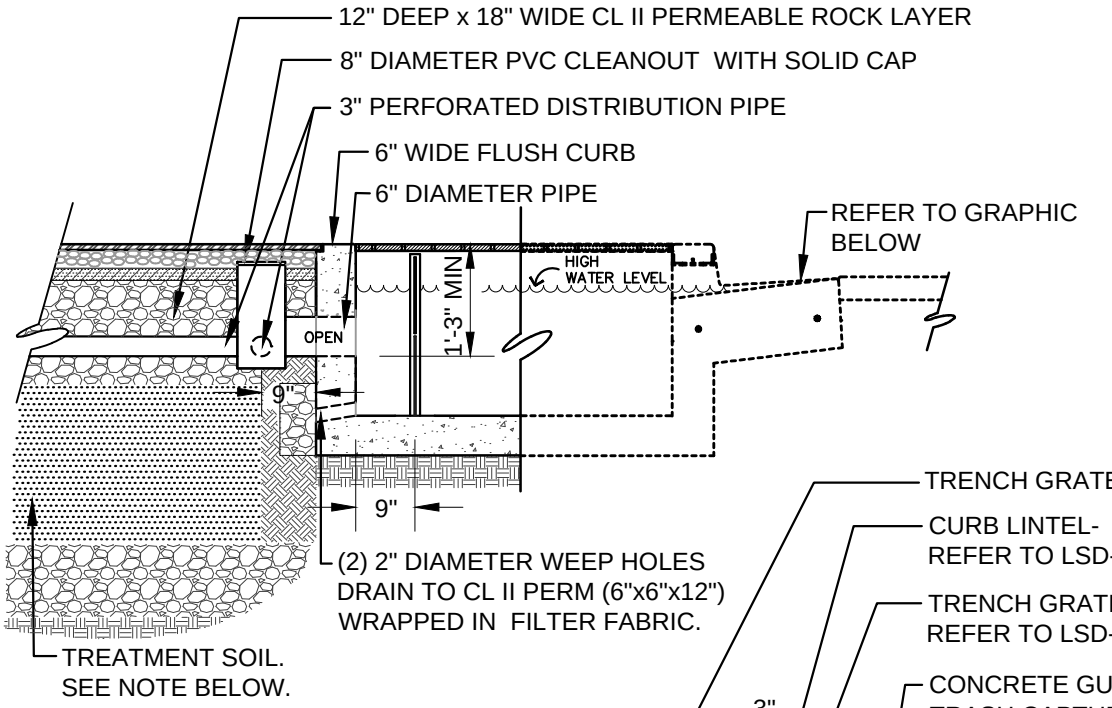

SUBSURFACE STORMWATER FACILITY
OPTION #1

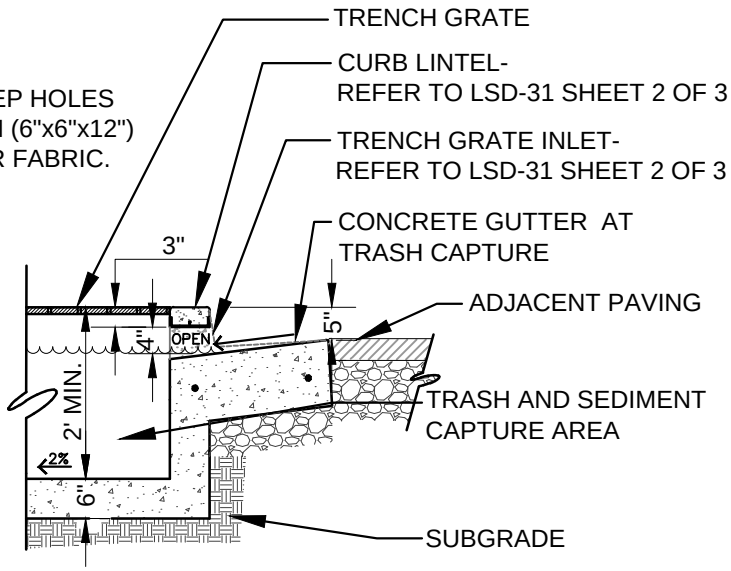

TRASH CAPTURE INLET FOR OPTION #1 AND #2

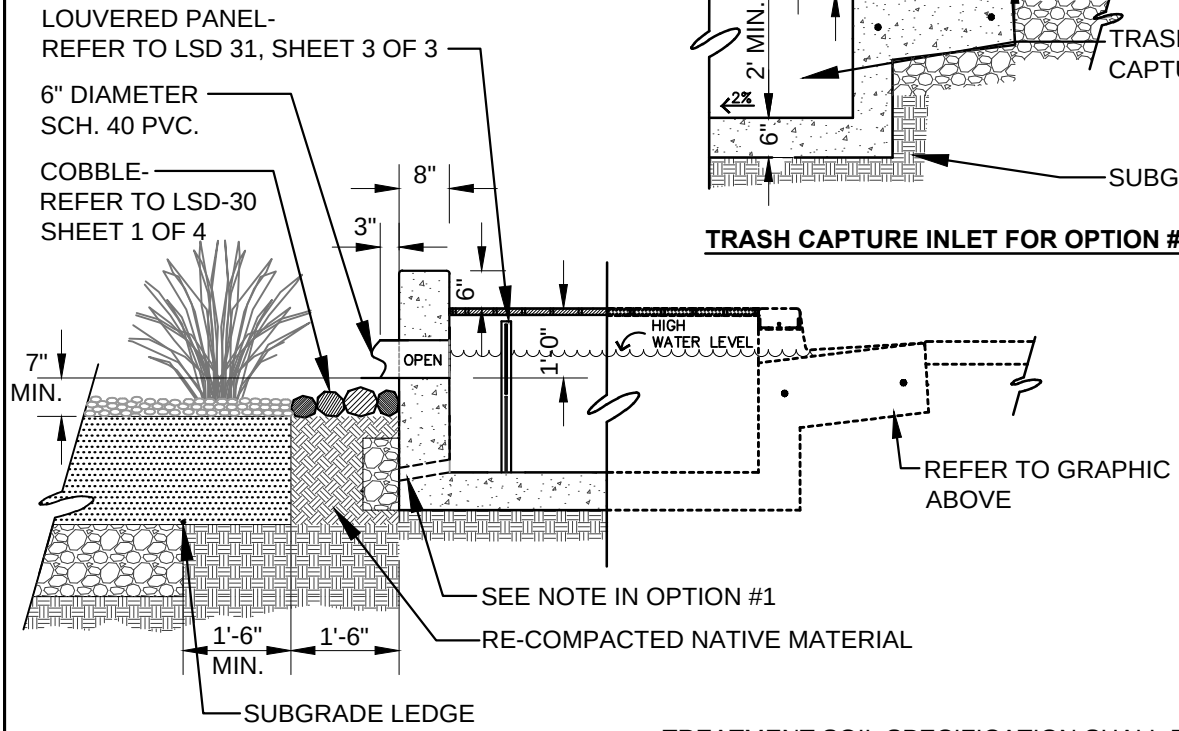

SURFACE STORMWATER FACILITY
OPTION #2

TREATMENT SOIL SPECIFICATION SHALL BE COMPOSED OF :
60% ASTM C-33 SAND
30% USCC STA CERTIFIED COMPOST
10% SMALL WOOD CHIPS

	Council Revision	12/13/11
APPR	REVISED	DATE
REVISIONS		

CITY OF FREMONT
STANDARD DETAILS
CITY STANDARD STORMWATER TRASH CAPTURE INLET

DATE APPROVED BY CITY COUNCIL 12/13/11
RESOLUTION NO. 2006-31
CITY ENGINEER

FILE NO.	SCALE	DRAWN	CHECKED	DATE	DWG NO.	
LSD-31.DWG	1/2" = 1'-0"	TB/CC	RER	NOV. 2011	LSD-31	1 OF 3

NOTES:

1. * REFER TO PLANS FOR MINIMUM OPENING WIDTH. VARIABILITY OF MINIMUM OPENING WIDTH IS SUBJECT TO REQUIREMENTS OF DRAINAGE AREA. REFER TO NOTES 1 AND 2 ON LSD-29, SHEET 2 OF 2.
2. DURING CONSTRUCTION RAIN EVENTS, TRASH CAPTURE DEVICE OPENING SHALL BE PROTECTED TO PREVENT WATER ENTRY UNTIL DEVICE IS APPROVED FOR USE BY PROJECT LANDSCAPE ARCHITECT.
3. REFER TO LSD 31, SHEET 1 OF 3 FOR WEEP HOLES QUANTITY AND DETAIL

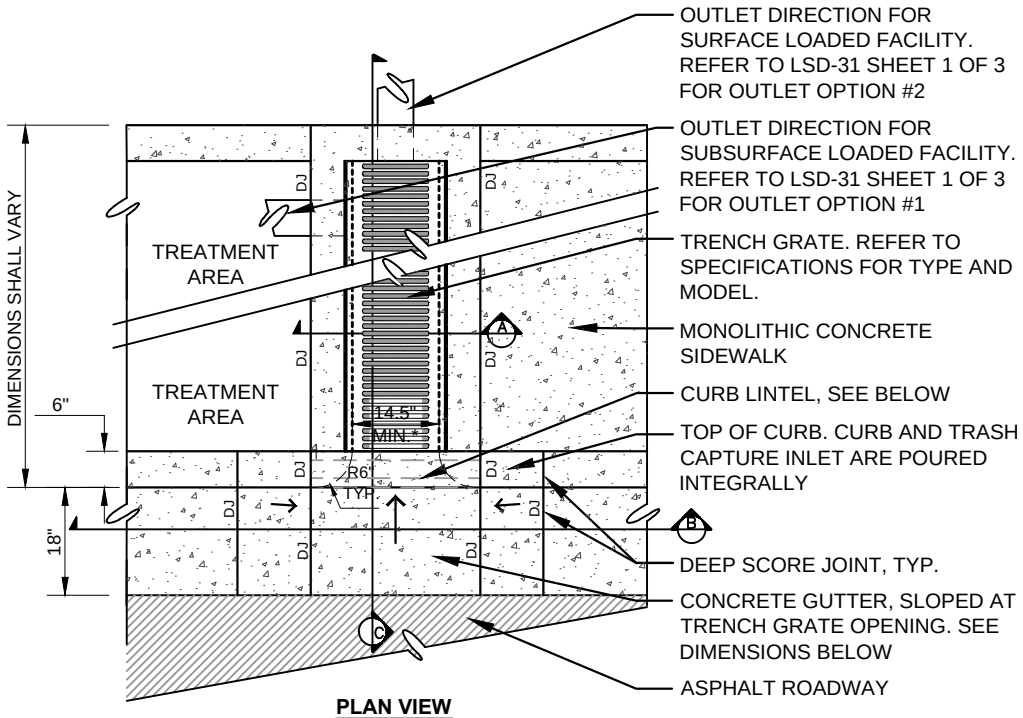

PLAN VIEW
TRASH CAPTURE INLET AND GRATE

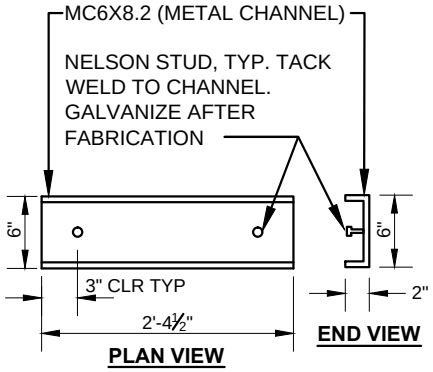

CURB LINTEL ENLARGEMENT
SCALE: 3/4"= 1'-0"

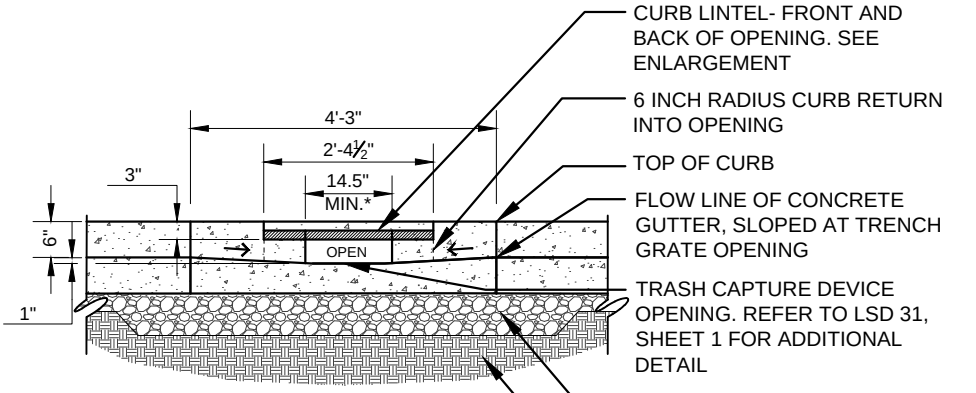

SECTION B
TRENCH GRATE INLET ENLARGEMENT

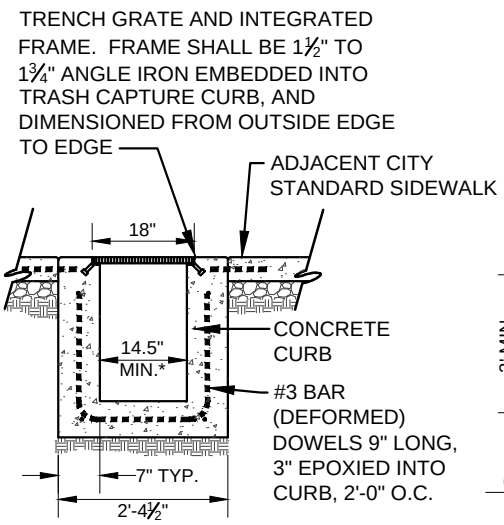

SECTION A
TRENCH GRATE AND CURB CONNECTION

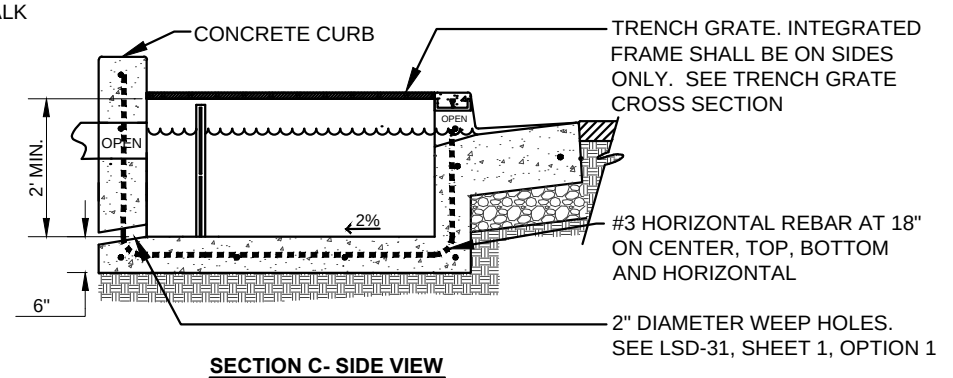

SECTION C- SIDE VIEW
SURFACE LOADED TRASH CAPTURE INLET

	Council Revision	12/13/11
APPR	REVISED	DATE
REVISIONS		

CITY OF FREMONT

STANDARD DETAILS

CITY STANDARD STORMWATER TRASH CAPTURE INLET

DATE APPROVED BY CITY COUNCIL 12/13/11

RESOLUTION NO. 2006-31

CITY ENGINEER

FILE NO.	SCALE	DRAWN	CHECKED	DATE	DWG NO.	
LSD-31.DWG	3/8" = 1'-0"	PN/TB/CC	RER	DEC. 2011	LSD-31	2 OF 3

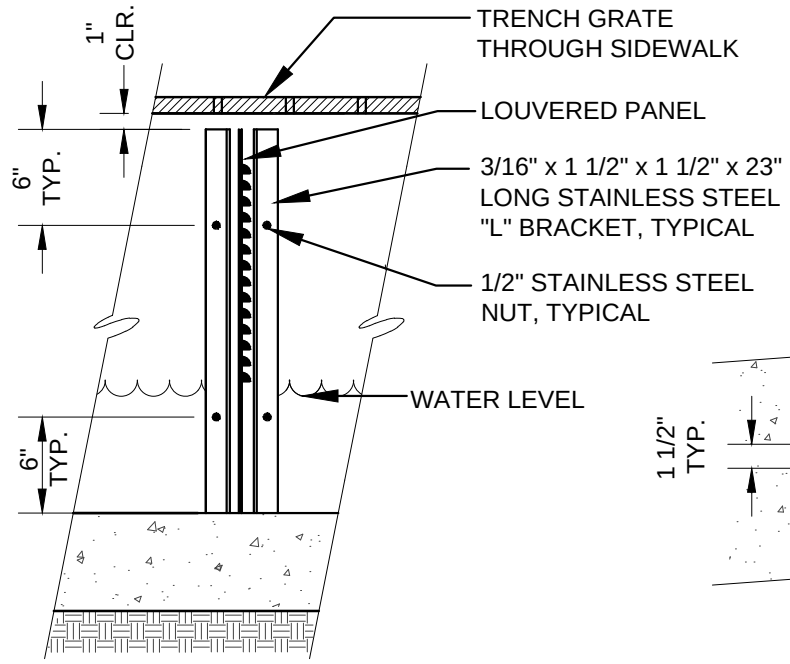

SIDE VIEW
N.T.S.

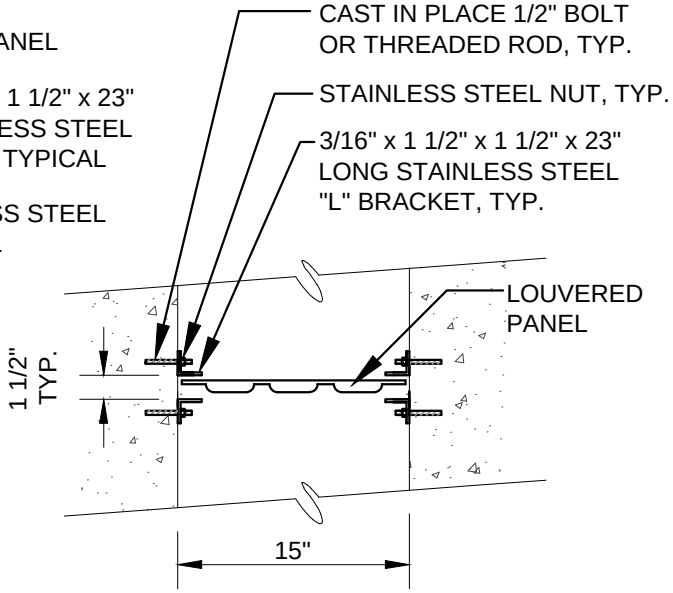

PLAN VIEW OF INLET CHANNEL

ACCEPTABLE LOUVERED PLATE AND BRACKET SUPPLIER, OR APPROVED EQUAL:

ROSCOE MOSS COMPANY
TYPE 304 STAINLESS STEEL
4360 WORTH STREET
LOS ANGELES, CA 90063
WWW.ROSCOEMOSS.COM

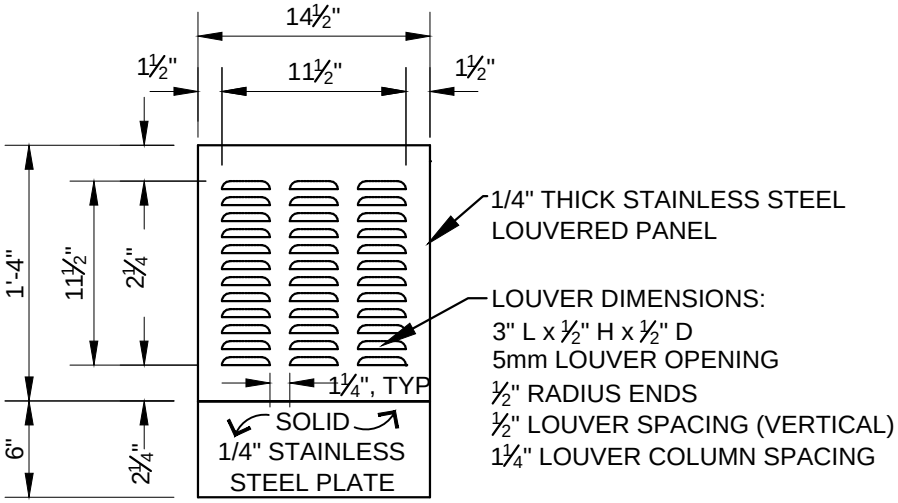

FRONT VIEW

NOTE:
1. LOUVERED PANEL MINIMUM DIMENSION: 22"H x 14 1/2"W x 1/4T". PANEL SIZES SHALL VARY DEPENDING UPON FACILITY REQUIREMENTS.
2. FIELD VERIFY AND MAINTAIN 1" CLEAR FROM BOTTOM OF TRENCH GRATE.

			CITY OF FREMONT STANDARD DETAILS CITY STANDARD STORMWATER TRASH CAPTURE INLET			DATE APPROVED BY CITY COUNCIL 12/13/11 RESOLUTION NO. 2006-31 CITY ENGINEER	
	Council Revision	12/13/11					
APPR	REVISED	DATE					
REVISIONS							
FILE NO. LSD-31.DWG	SCALE 1" = 1'-0"		DRAWN MAM/CC	CHECKED RER/MM	DATE NOV. 2011	DWG NO. LSD-31	3 OF 3